Anritsu

SERVICE MANUAL

PLUG-IN UNIT

MH925A

ANRITSU ELECTRIC CO., LTD.

Digitized by the Internet Archive
in 2024

https://archive.org/details/manualsplus_01419

SERVICE MANUAL

PLUG-IN UNIT

MH925A

ANRITSU ELECTRIC CO., LTD.

1985.02 x 300 NII-2(Y)
Printed in Japan

CERTIFICATION

Anritsu Electric Co., Ltd. certifies that this instrument has been thoroughly tested and inspected, and found to meet published specifications prior to shipping.
Anritsu further certifies that its calibration measurements are based on the Japanese Electrotechnical Laboratory and Radio Research Laboratory standards.

WARRANTY

All Anritsu products are warranted against defects in material and workmanship. The warranty is effective for one year from the date of delivery. In the event of improper use, abuse, or damage due to natural catastrophe, the warranty will become void. Anritsu will repair or replace products which prove to be defective during the warranty period, provided they are returned to Anritsu.
No other warranty is expressed or implied.
All requests for repairs and replacement parts should be directed to Anritsu or its representative in your area.

Copyright © 1984 by Anritsu Electric Co., Ltd. Printed in Japan.
All rights reserved. No part of this manual may be reproduced in any form without written permission of Anritsu Electric Co., Ltd.

TABLE OF CONTENTS

		Page
SECTION 1	GENERAL	1-1
SECTION 2	MECHANICAL CONFIGURATION AND CIRCUITRY	2-1
2.1	Safety Precautions	2-1
2.2	Mechanical Configuration	2-1
2.3	Circuit Reference	2-14
2.4	Circuit Description	2-15
2.4.1	General	2-15
2.4.2	Explanation of Units	2-15
SECTION 3	TROUBLESHOOTING AND REPAIR	3-1
3.1	General	3-1
3.2	Checking and Replacement of Parts	3-1
3.2.1	Explanation of Identification Marking on the PC Board	3-1
3.2.2	Notes on Soldering	3-3
3.2.3	Transistor Check	3-3
3.3	Instrument Required for Troubleshooting and Repair	3-5
3.4	Troubleshooting	3-5
3.4.1	Overall Troubleshooting	3-6
3.4.2	Troubleshooting Aid	3-11

TABLE OF CONTENTS (Cont'd)

		Page
3.5	Troubleshooting of Each Unit 2 to 12 ...	3-21
3.5.1	Z1 Motherboard 2	3-21
3.5.2	Z2 LD/AO CONTROL 3	3-27
3.5.3	Z3 APD BIAS 4	3-37
3.5.4	Z4 THERMO CONTROLLER 5	3-41
3.5.5	Z5 APD MODULE 6, Z2 in Z5 APD 7	3-49
3.5.6	Z6 AMP 8	3-55
3.5.7	Z7 POWER SUPPLY 9	3-61
3.5.8	Z8 AO DRIVER 10, Z1 in Z8 X'TAL OSCILLATOR 11, Z2 in Z8 AMP PC BOARD 12	3-67
SECTION 4	ADJUSTMENT	4-1
4.1	Instruments Required for Adjustment	4-2
4.2	Adjustment Flow	4-4
4.3	Adjustment of Each Circuit	4-5
4.3.1	Z7 POWER SUPPLY	4-5
4.3.2	Z8 AO DRIVER	4-5
4.3.3	Z4 THERMO CONTROLLER	4-7
4.3.4	Z2 LD/AO CONTROL (Preadjustment)	4-10
4.3.5	Z3 APD BIAS (Preadjustment)	4-13
4.3.6	Z6 AMP	4-15

TABLE OF CONTENTS (Cont'd)

		Page
4.3.7	Z3 APD BIAS	4-17
4.3.8	Z2 LD/AO CONTROL	4-19
4.3.9	Overall Adjustment	4-21
SECTION 5	REPLACEABLE PARTS	5-1
5.1	Introduction	5-1
5.2	Method of Reading Capacitors/Resistors	5-3
5.2.1	Capacitor Identification	5-3
5.2.2	Resistor Identification	5-4
5.3	Ordering Information	5-5
5.4	Component List	5-6

SECTION 1

GENERAL

This manual describes how to troubleshoot, repair, and adjust.

Since the MH925A is a plug-in unit of the Optical Time Domain Reflectometer MW98A, refer to the service manual of the MW98A.

SECTION 2

MECHANICAL CONFIGURATION AND CIRCUITRY

2.1 Safety Precautions

(1) In order to avoid an electric shock to the human body, the "⏚" terminal on the rear panel of the MW98A must be grounded during the operation.

(2) The MH925A must be mounted and removed to and from the MW98A surely in the MW98A power off.

(3) Make sure the line voltage to be applied to the MW98A and the line voltage indication on the rear panel of the MW98A.

(4) The MH925A uses a laser diode as a light source. Exposure to the radiation produced by the laser diode may cause injury to the eyesight of the operator. The protective cover on the MH925A is designed to protect the operator from exposure to laser radiation. DO NOT OPEN THE PROTECTIVE COVER WITHOUT DISCONNECTING THE POWER CORD PLUG OF THE MW98A. In the event that the cover is opened and the MW98A is receiving power, DO NOT STARE INTO THE BEAM PRODUCED BY THE LASER DIODE.

Caution-use of controls or adjustments of performance of procedures other than those specified herein may result in hazardous radiation exposure.

2.2 Mechanical Configuration

Table 2-1 shows mechanical parts list. Figures 2-1 to 2-10 show exploded view of the MH925A.

Table 2-1 Mechanical Parts List

NO.		PART NO.	DESCRIPTION	REMARKS	Q'TY
Fig. 3-1	1	33B23250	TOP COVER		1
	2	332B23588B	BOTTOM COVER		1
Fig. 2-2	3	NO. 1256	FC RECEPTACLE		2
	4	34H72446B	SCREW		1
	5	W41N4126A	COVER		1
	6	W4H4128A	PIPE		1
	7	332B23289B	FRONT COVER		1
	8	332B23249C	FRONT COVER		1
Fig. 2-3	9	W49J4264	CABLE		1
	10	W4B4974	ISOLATION PLATE		1
		W4Z4973	RING		4
Fig. 2-4	11	34B78700C	COVER		1
	12	W32B1863	CASE		1
Fig. 2-6	13	W3B1865	COVER		1
	14	W32B1864	CASE		1
Fig. 2-7	15	W32B1674	CASE		1
	16	W3B1675	COVER		1
	17	W4B4116	ISOLATION PLATE		1
Fig. 2-9	18	W4B3123	SHIELDING PLATE		1
	19	W34B2012A	REAR PANEL		1
	20	34B73670	CORD WINDER		2
	21		SCREW	3NPS50B3	4

Table 2-1 Mechanical Parts List (Cont'd.)

NO.		PART NO.	DESCRIPTION	REMARKS	Q'TY
Fig. 2-10	22	W42H4730	LOCK KNOB		1
	23	W4H5636	WASHER		1
	24		SPRING	6SW PB3	1
	25		E TYPE RING	JE5	1
	26	W4B4733	SPRING		1
	27	W4B4734	CLAMP PLATE		1
	28	W4H4735	RING		1
	29	W4B4732	ANGLE		1

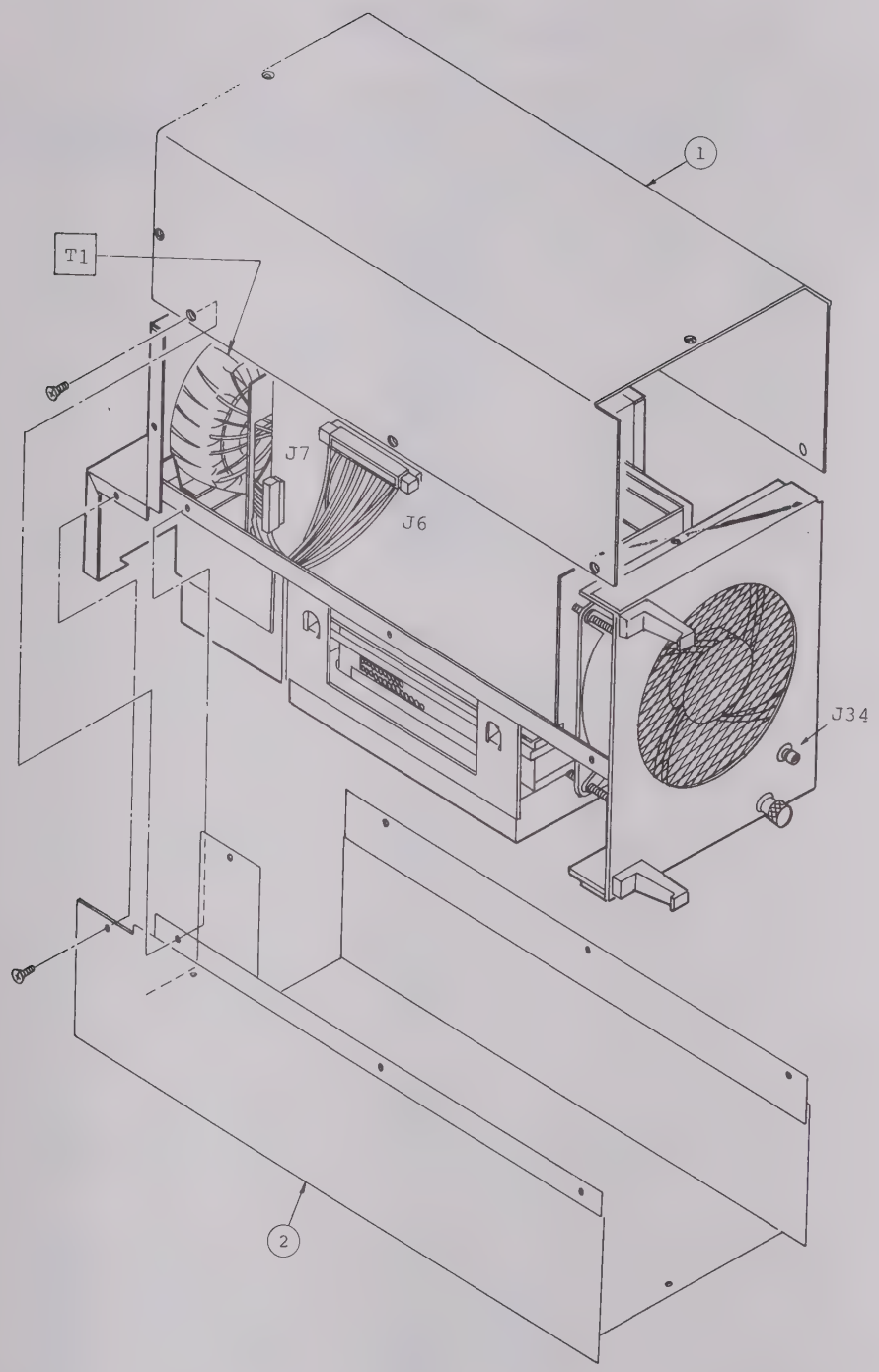

Fig. 2-1 Cabinet Assembly

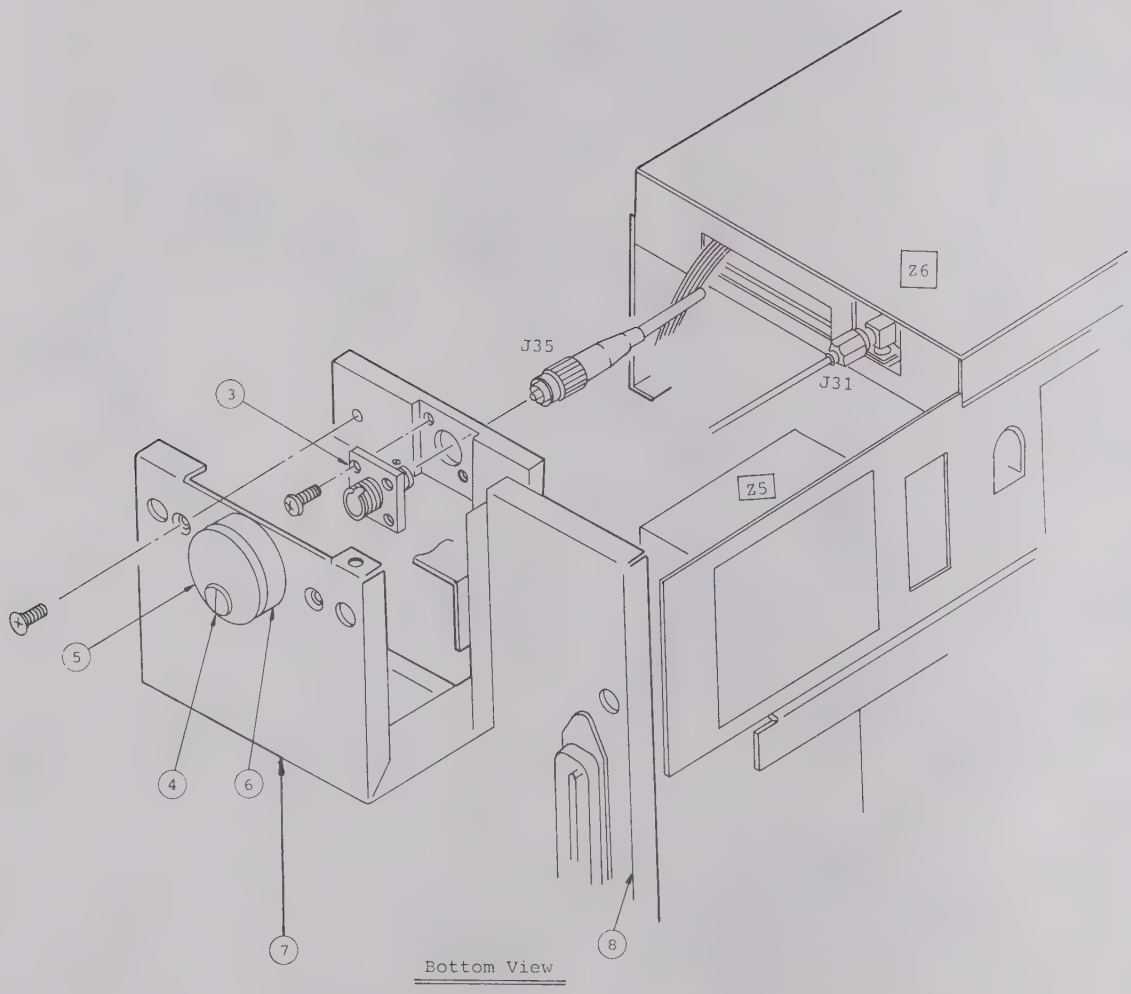

Fig. 2-2 FC Receptacle Assembly

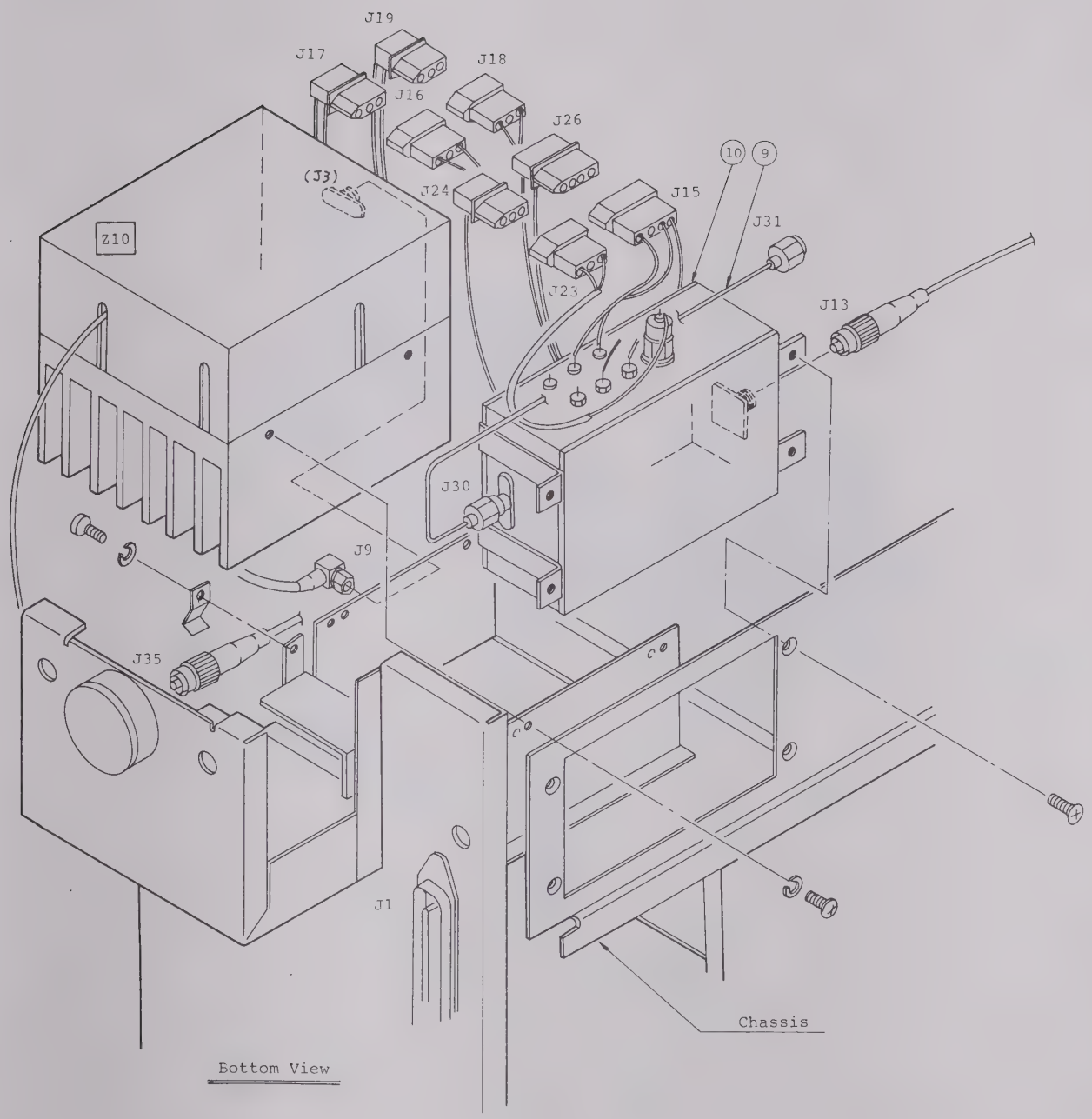

Fig. 2-3 LD Module (Z10) and APD Module (Z5) Assembly

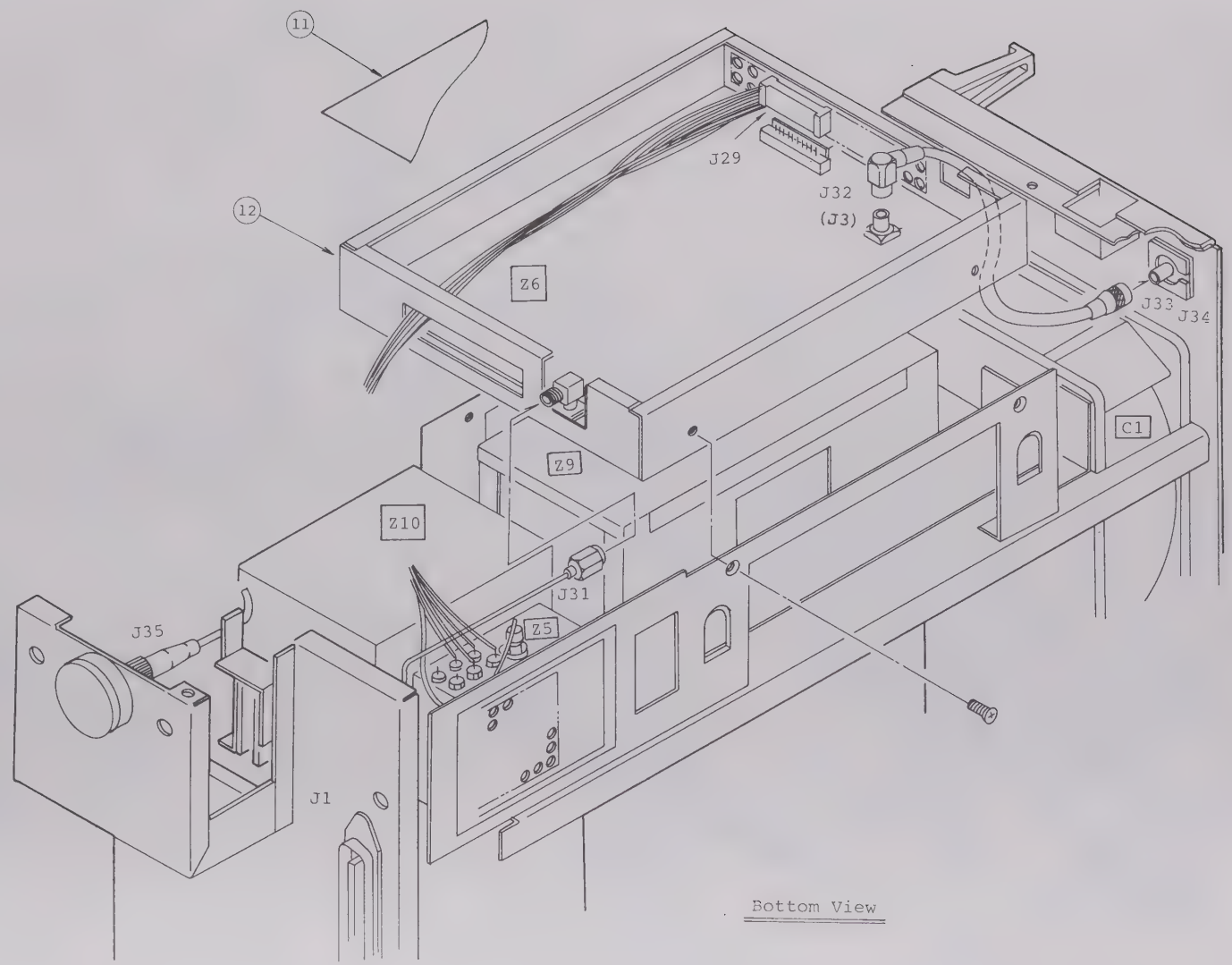

Fig. 2-4 AMP (Z6) Assembly

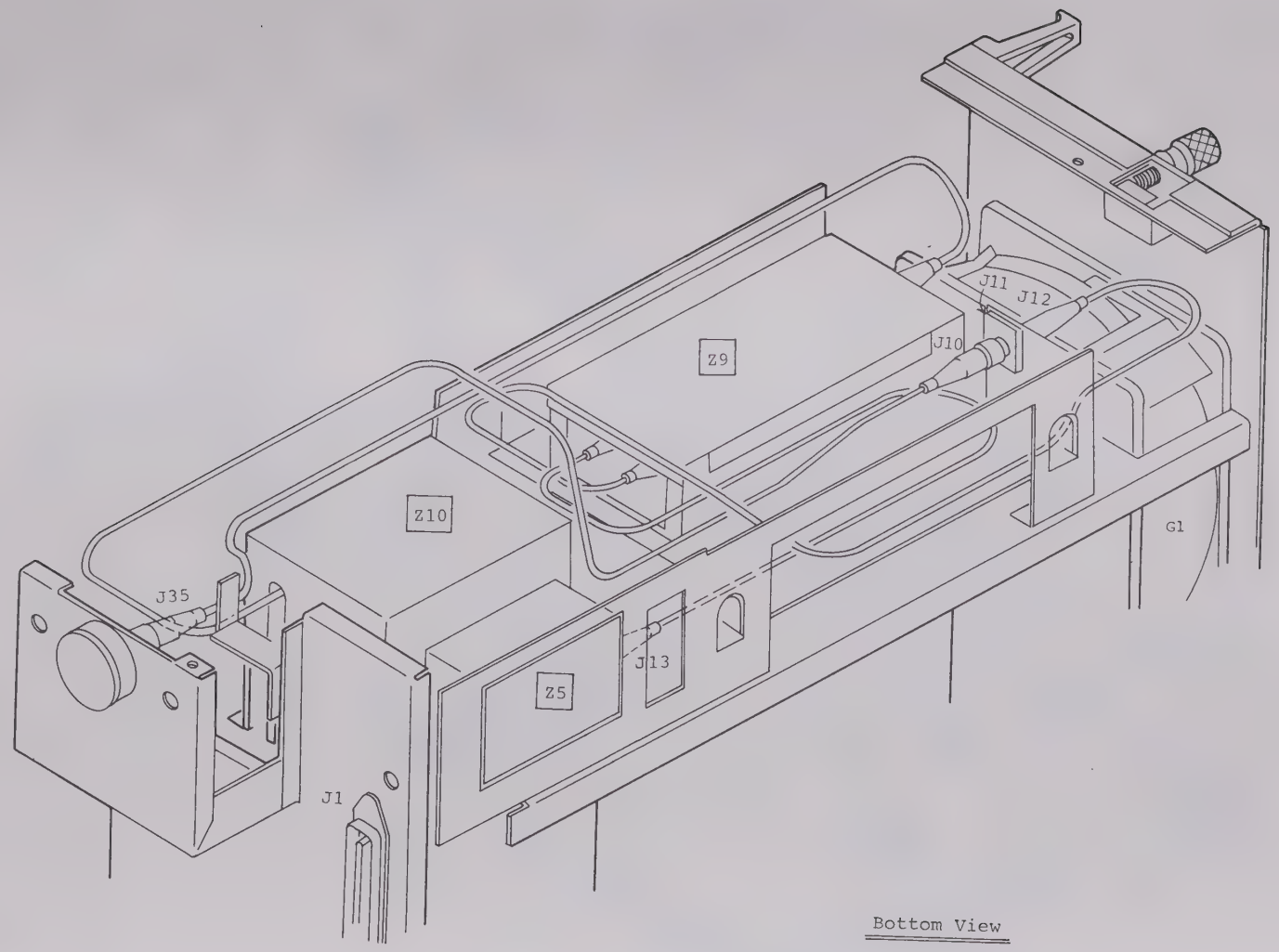

Fig. 2-5 Fiber Cord Assembly

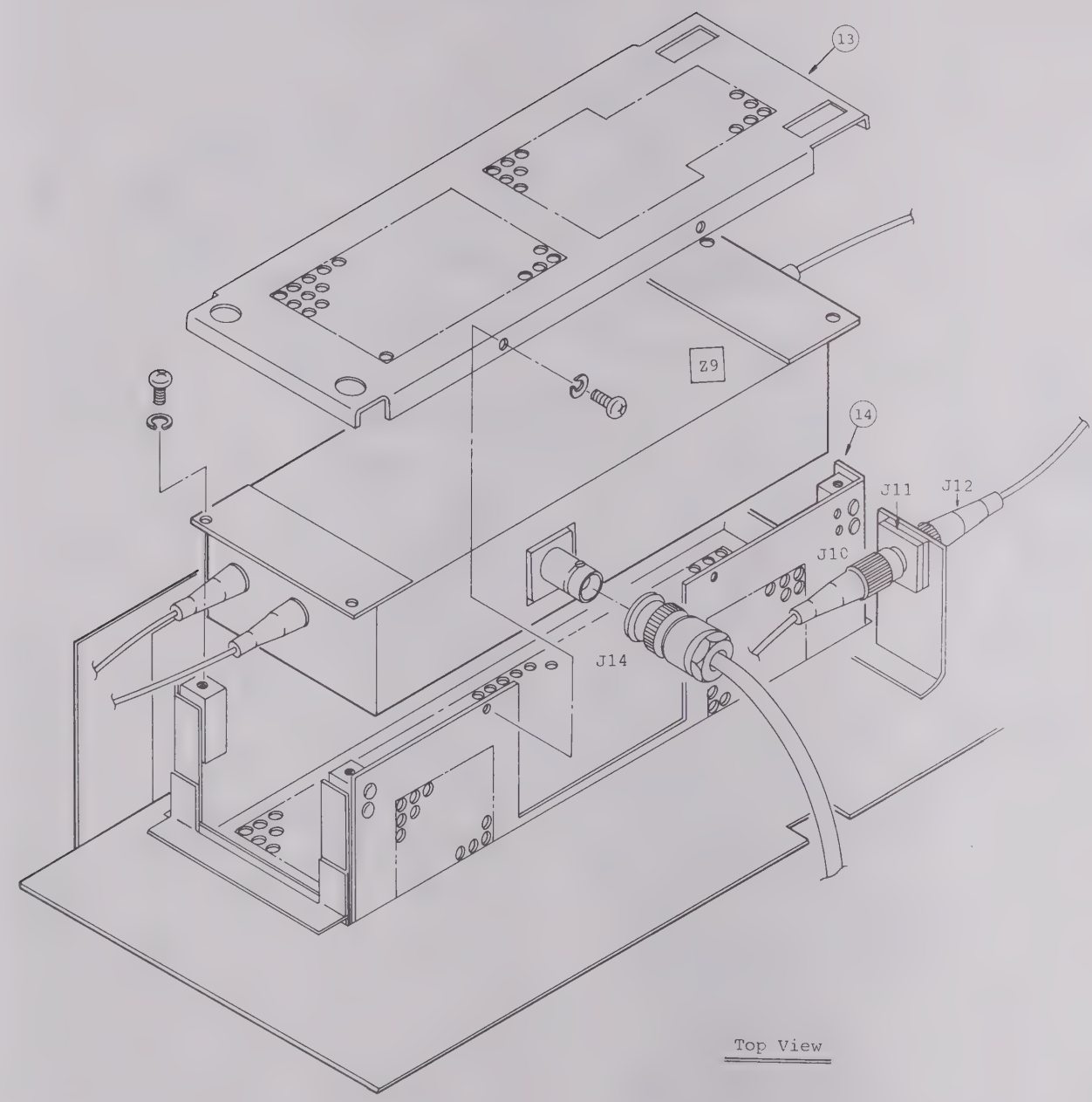

Fig. 2-6 AO Switch (Z9) Assembly

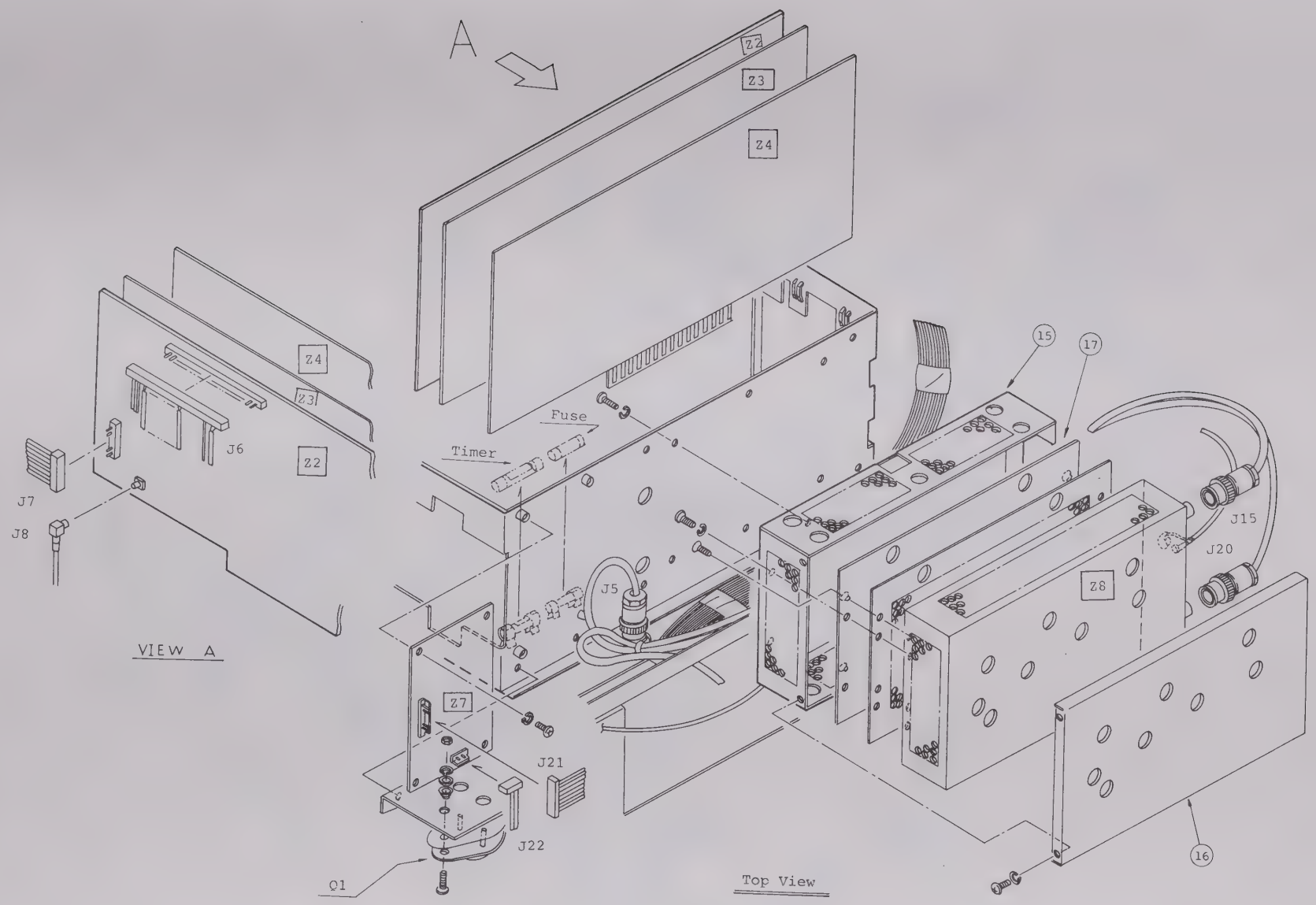

Fig. 2-7 Motherboard (Z2), LD/AO Control (Z3), APD BIAS (Z4), Power Supply (Z7), and A/O Driver (Z8) Assembly

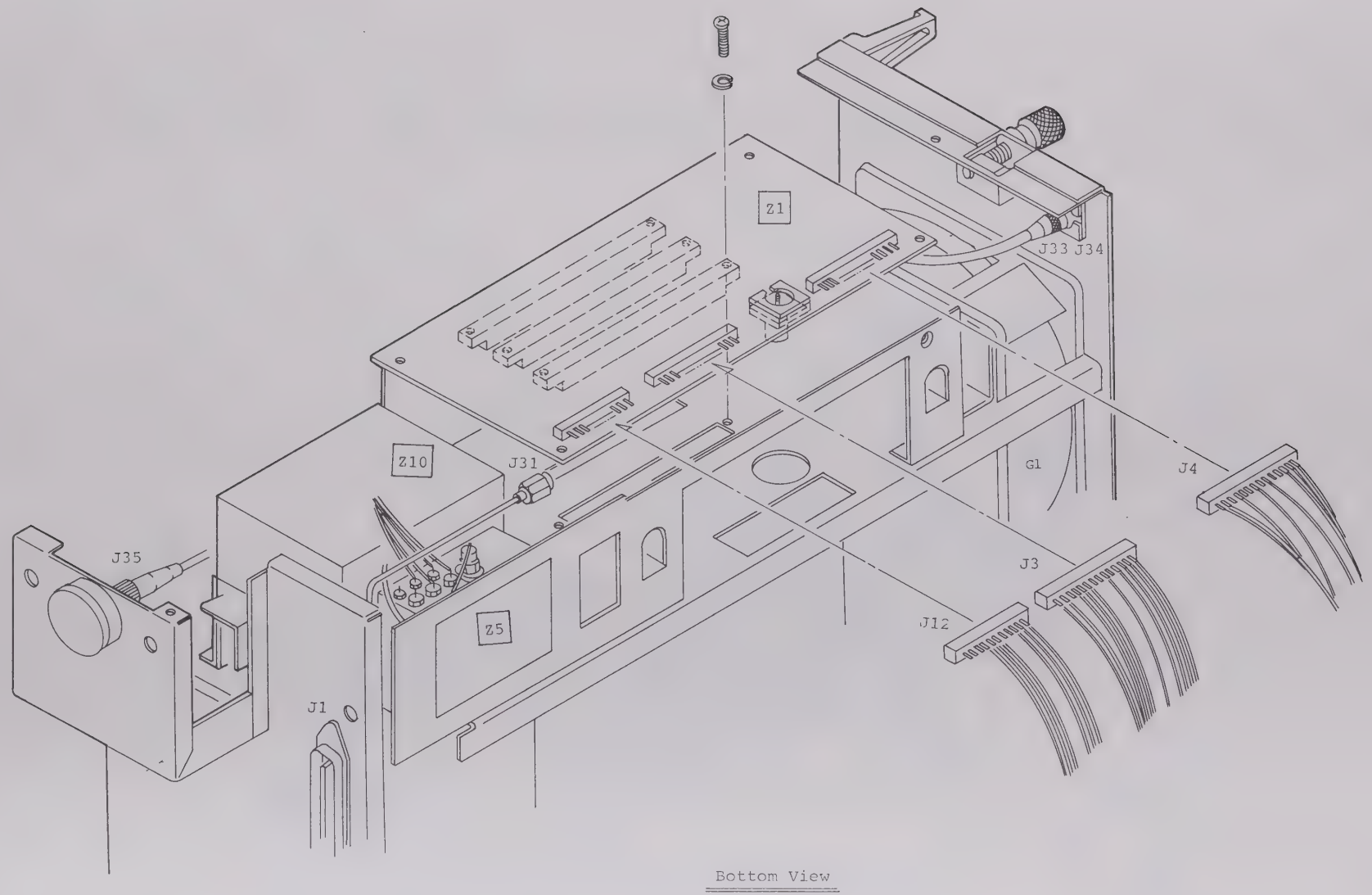

Fig. 2-8 Motherboard Assembly

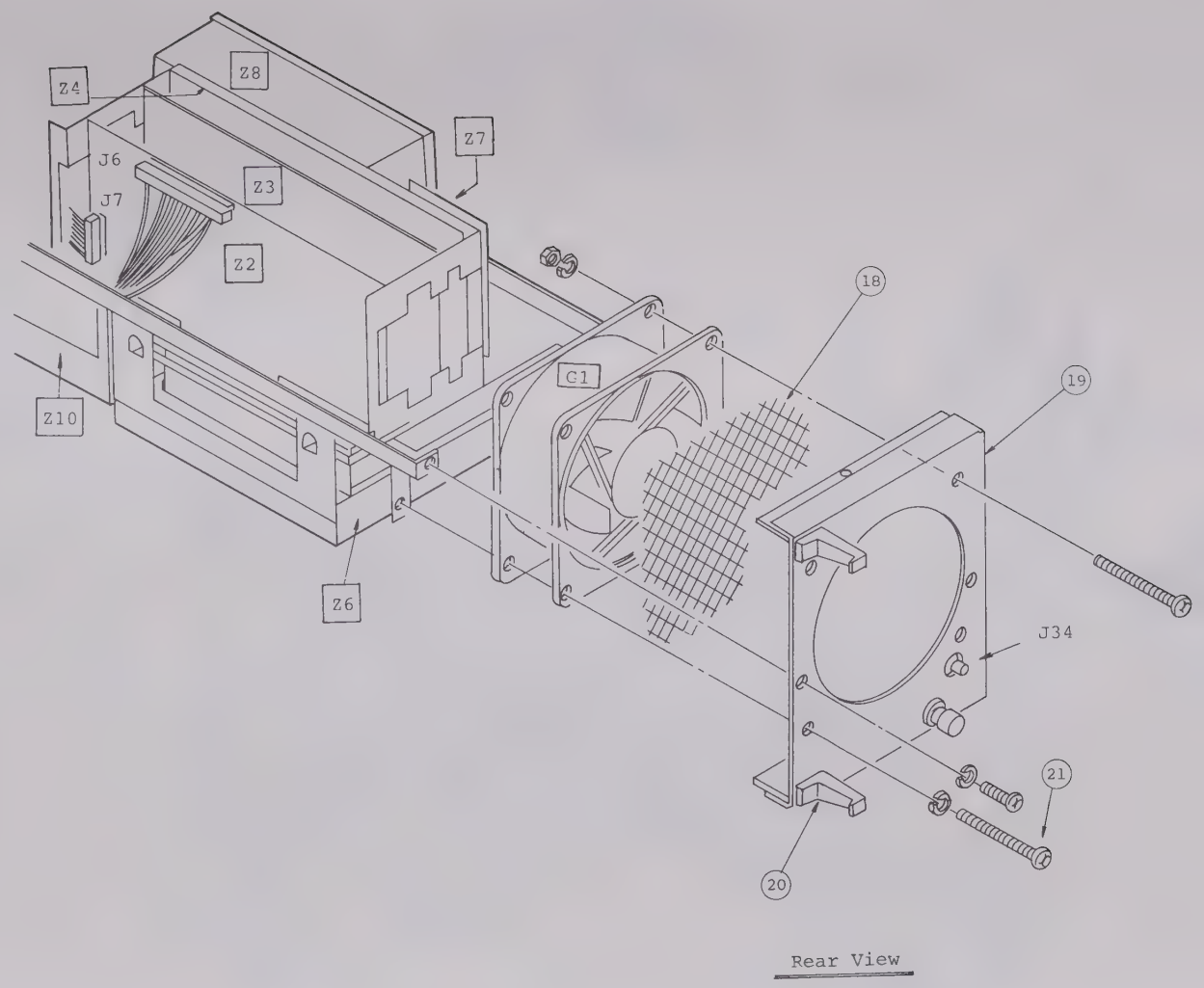

Fig. 2-9 Rear Panel and Fan Assembly

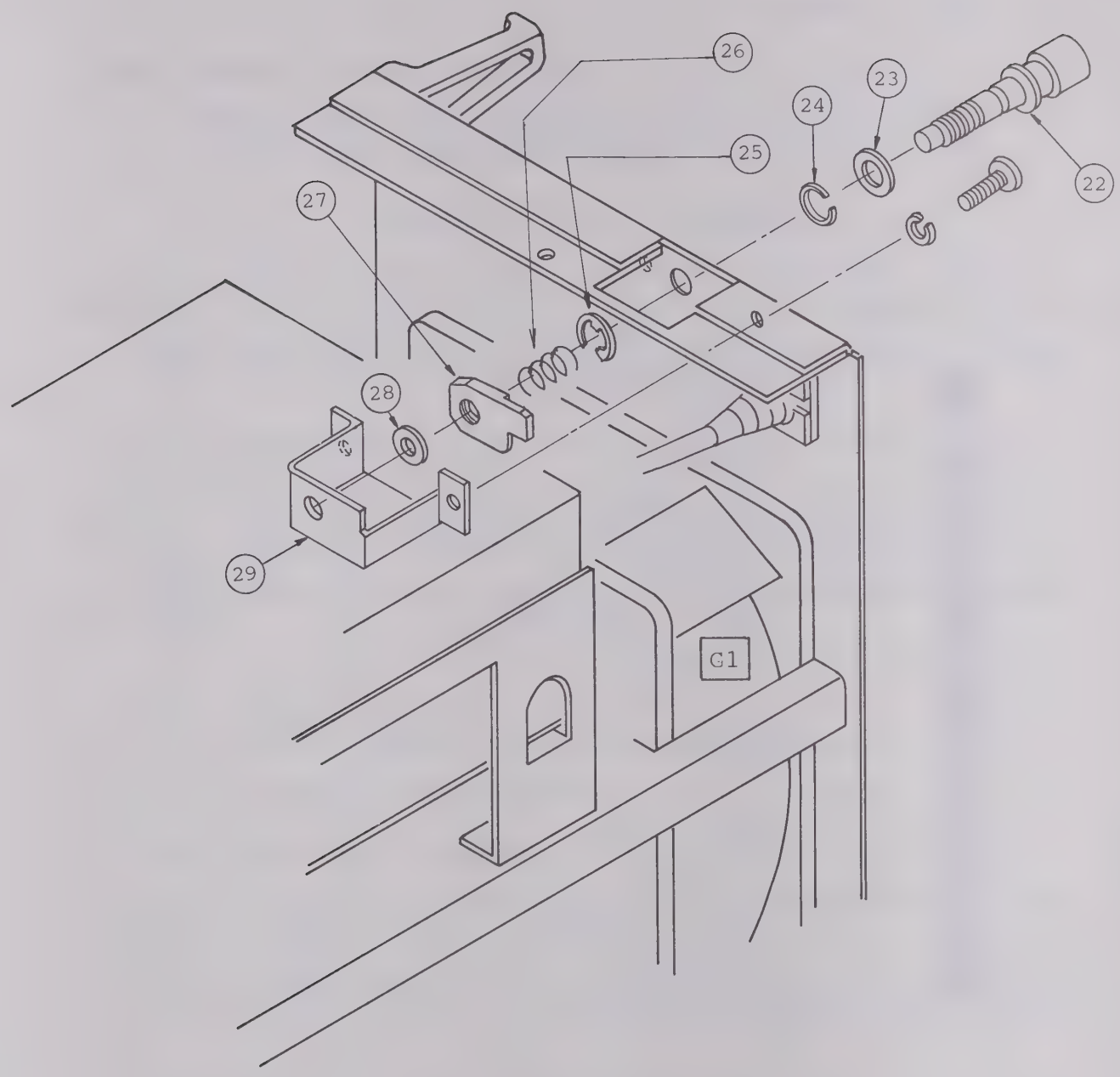

Fig. 2-10 Lock Knob Assembly

2.3 Circuit Reference

The PC boards of the MH925A are given Z numbers such as Z1, and Z2. Table 2-2 gives a list of the Z numbers, names and circuit diagram numbers of the PC boards.

Table 2-2 Circuit Reference

Circuit Diagram No.	Name	Z No.	PC Board No.
1	CIRCUIT DIAGRAM OF MH925A	-	-
2	MOTHERBOARD	Z1	W22U0405
3	LD/AO CONTROL	Z2	W32U1851
4	APD BIAS	Z3	W32U1870
5	THERMO CONTROLLER	Z4	W32U1849
6	APD MODULE	Z5	-
7	APD	(Z2 in Z5)	W42U2285
8	AMP	Z6	W32U1847
9	POWER SUPPLY	Z7	-
10	AO DRIVER	Z8	-
11	X'TAL OSCILLATOR	(Z1 in Z8)	W42U3152
12	AMP PC BOARD	(Z2 in Z8)	W32U1462

2.4 Circuit Description

2.4.1 General

The MH925A generates optical pulses with the laser diode (LD). The optical pulses are supplied to a test fiber through the Acoustooptic (AO) switch. The back-scattering light and Fresnel reflection are received by the avalanche photodiode (APD) through the AO switch. The APD converts the received light to electrical signals.
The converted signal is amplified to 40 dB by the AMP unit (Z6) and output from the O/E OUTPUT connector.

2.4.2 Explanation of Units

The block diagram of the MH925A is shown in Fig. 2-11. The MH925A consists of a fan (G1), Power transformer (T1), PC boards (Z1 to Z4, and Z6 to Z8), and modules (Z5, Z9 and Z10).

(1) Fan (G1)

- Used mainly for cool the LD module.
- Operates with 103 Vac.

(2) Power transformer (T1)

- The primary side ac input is supplied from the MW98A.
- The secondary side outputs are sent to the following units.

35 Vac ..... Power source (Z7)

30 Vac ..... APD bias (Z3)

14 Vac ..... Thermo controller (Z4)

100 Vac ..... Thermo controller (Z4)

36 Vac ..... Thermo controller (Z4)

(3) Motherboard (Z1)

The motherboard consists of three 44-pin connectors, and is connected to Z2, Z3 and Z4. The motherboard has a 2A fuse for 103 Vac supplied from MW98A and a 5000H timer.

(4) LD/AO control (Z2)

This PC board consists of a circuit for generating optical pulse widths of 0.1, 0.5 and 2 μS, and a circuit for driving the LD, a circuit for generating timings for masking the Fresnel reflection from the near end of the test fiber and optional position by means of the AO switch, and a circuit for generating a zero-sampling timing for compensating the drift due to temperature variations of the APD and AMP (Z6).

(5) APD bias (Z3)

This PC board consists of a circuit for supplying the power source to the APD in order to multiply the APD gain by 10, a circuit for limiting the current flow so that the dark current flowing in the APD does not exceed the absolute maximum ratings of 200 μA, and a circuit for controlling the gain variations of APD due to the temperature variations of the APD.

(6) Thermo controller (Z4)

This PC board consists of a circuit for driving the cooling element so that the temperature of the LD is kept at 25°C, and a circuit for issuing a singal indicating that the temperature of the LD is 25°C.

A 2A fuse is provided for 14 Vac.

(7) APD module (Z5)

This module consists of an APD for converting the light to current signals and an operational amplifier for converting the current signals to voltage signals.

(8) AMP (Z6)

This PC board consists of an operational amplifier for amplifying the signal of the APD module (Z5) by 40 dB, a control circuit for sampling and feeding back the drift due to variations in temperature of the APD and AMP (Z6) in order to maintain a zero level.

The output impedance is 150Ω.

(9) Power supply (Z7)

This circuit supplies the 24 V 1A power source to the AO driver (Z8).

A 3.15A fuse is provided for 35 Vac.

(10) A/O driver (Z8)

This driver switches the AO switch by the mask signal sent from the LD/AO control (Z2). This driver consists of a 120 MHz crystal oscillator and an AMP PC board for driving the AO switch with 120 MHz.

No signal is sent to AO switch when masking. 120 MHz is sent to AO switch when no masking. The output impedance is 150Ω.

(11) AO switch (Z9)

This switch supplies the optical signal of the LD to the test fiber, and switches the backscattering light from the test fiber on the APD side.

The mask signal of the AO driver (Z8) is used to attenuate the light of the Fresnel reflection from the vicinity of the test fiber and optional position.

The input impedance is 50Ω.

(12) LD module (Z10)

This module converts the electric pulse (0.1, 0.5, and 2 μs) issued from the LD/AO control (Z2) to optical pulse. A cooling element that keeps the temperature of the LD at 25°C is built-in.

By keeping a constant temperature of 25°C, the LD output power and variations in wavelengths can be controlled (0.5 mm/°C).

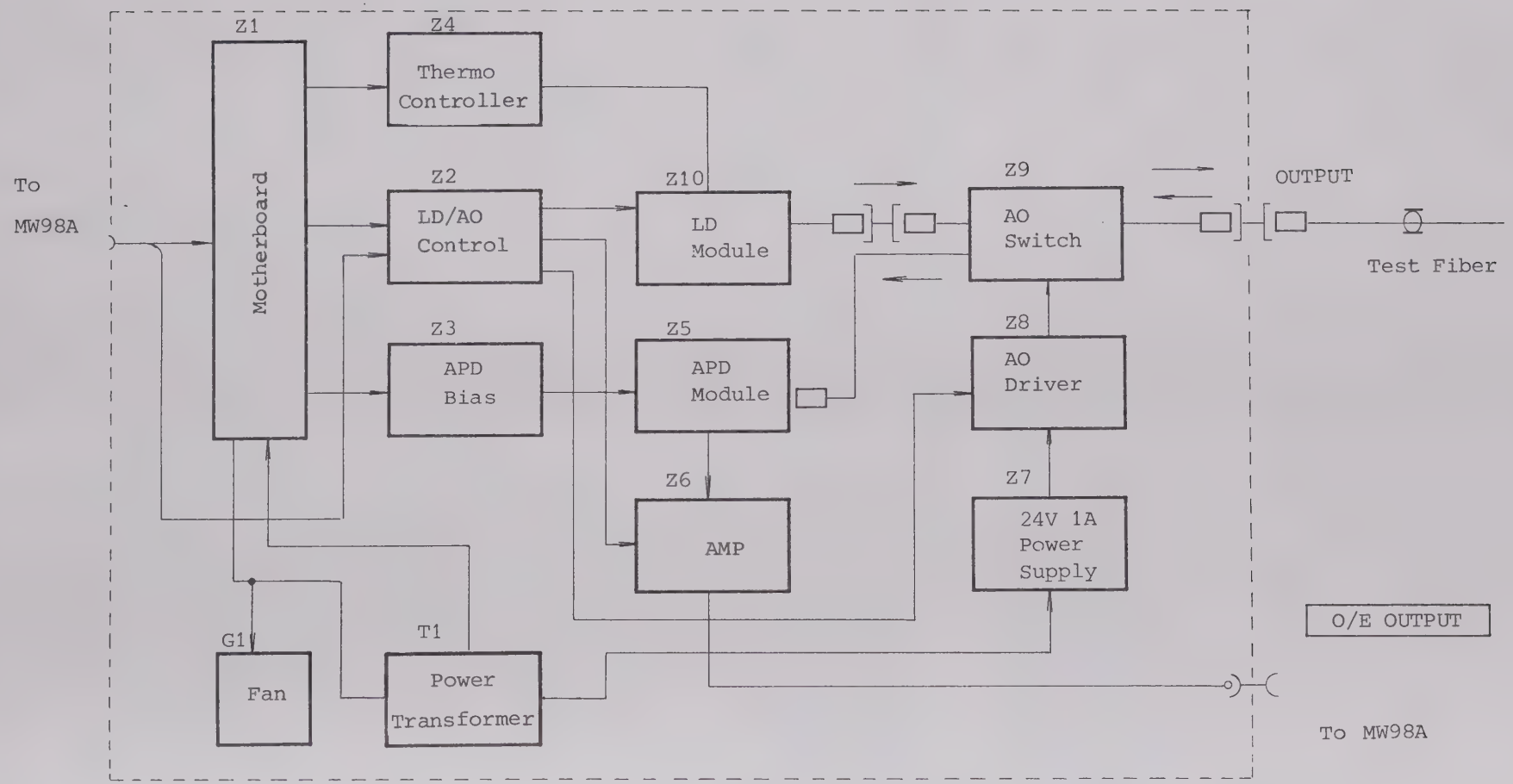

Fig. 2-11 Block Diagram of MH925A

SECTION 3

TROUBLESHOOTING AND REPAIR

3.1 General

Section 3 describes how to troubleshoot and repair when trouble occurs during measurements or when abnormalities are detected during performance test.

Section 3 also explains checking and replacement of parts.

3.2 Checking and Replacement of Parts

3.2.1 Explanation of Identification Marking on the PC Board

As shown in Fig. 3-1, the MH925A PC board has the unit number, PC board number with the revision number, and test point number.

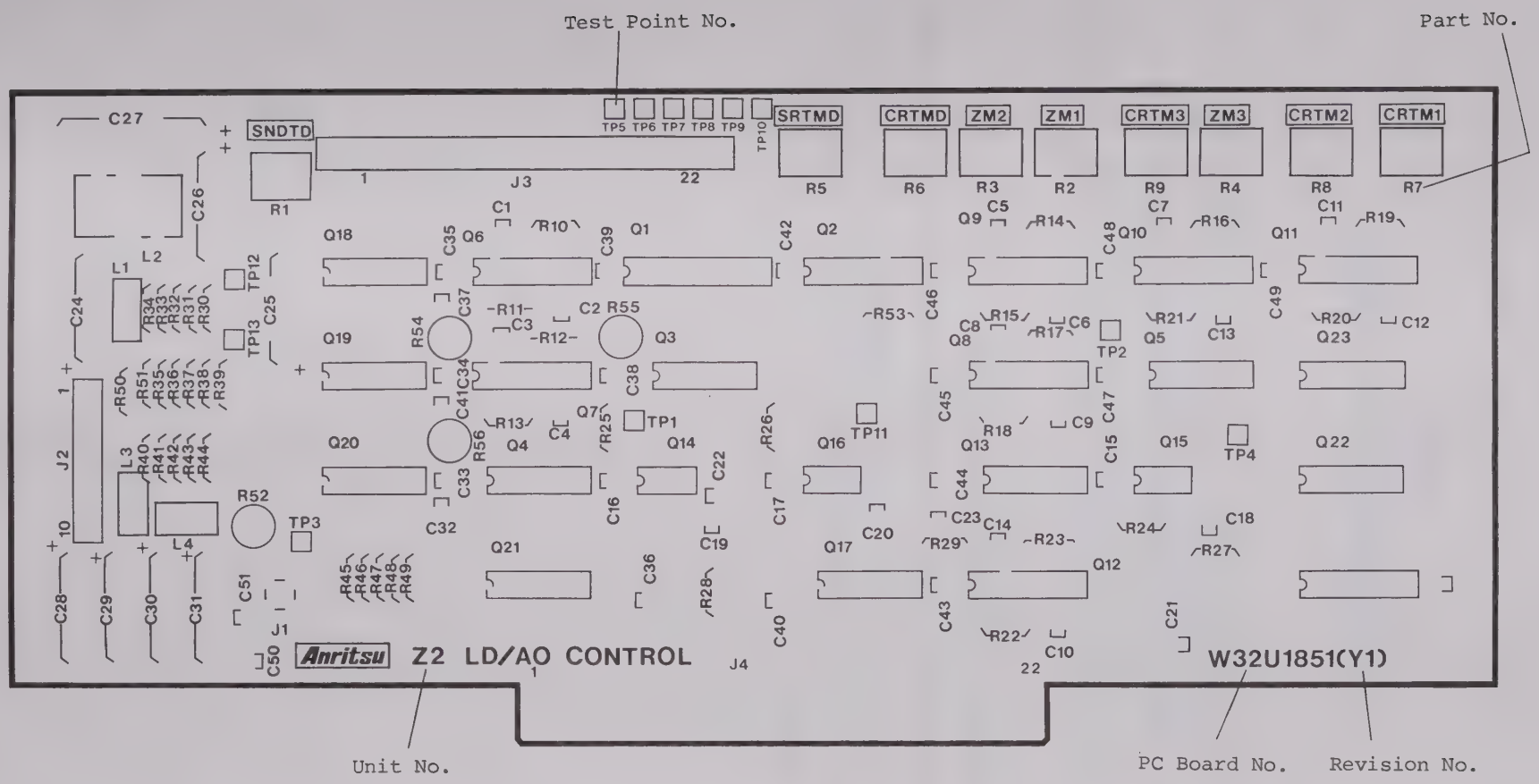

Fig. 3-1 Identification Marking of PC Board

3.2.2 Notes on Soldering

(1) Use an ordinary 30 to 40 watt pencil type soldering iron.

(2) Before using the soldering iron, be sure it is insulated. If not, it may damage the part.

(3) When removing a soldered component from a circuit board or soldering in a new component, nip the component lead with tweezers to shunt heat.

(4) The tips of major component leads are bent behind the PC board to ensure tight support. To remove a component, first lift up the tips of the leads and then remove the component.

3.2.3 Transistor Check

(1) Check of Transistors mounted on the PC board.

Transistors can be checked for acceptable quality in the operating state by measuring the base and emitter potentials. The NPN type silicon transistor shows a value that the base potential is 0.6 or 0.7 V higher than the emitter potential. In the PNP silicon transistor, the former is 0.6 or 0.7 V lower than the latter. Transistors are, therefore, faulty if these relationships are not satisfied.

(2) Check of transistors removed from the PC board

Transistors can be checked by measuring the resistance values among the emitter, base, and collector using a circuit tester. Standard values are given in Table 3-1. Note that this check should be performed at a measuring current of less than 100 μA.

Table 3-1 Test of Transistors Removed from the PC board

Type of Transistor	Connect Ohmmeter		Resistance to be Measured ohm
	Positive lead to	Negative lead to	
PNP silicon	Emitter, Collector	Base	1 to 10 k
	Emitter	Collector	Very high
NPN silicon	Base	Emitter, Collector	1 to 10 k
	Emitter	Collector	Very high

3.3 Instrument Required for Troubleshooting and Repair

Table 3-2 Instruments Required for Troubleshooting and Repair

Instrument	Required Specification	Remarks
Digital Multimeter	Measuring Voltage Range: 0 to ±100 V (DC)	
Optical Power Meter with Optical Sensor	Wavelength: 0.75 to 1.8μm Measuring range : -40 to +10 dBm	Anritsu ML93A and MA98A
Optical Fiber Cable	Length : 2 m (SMF)	

3.4 Troubleshooting

When troubleshooting MH925A, troubleshoot MW98A according to the MW98A Service Manual.

If MH925A is assumed to be faulty, perform subsequent troubleshooting with it connected to the MW98A using the connecting cable.

3.4.1 Overall Troubleshooting

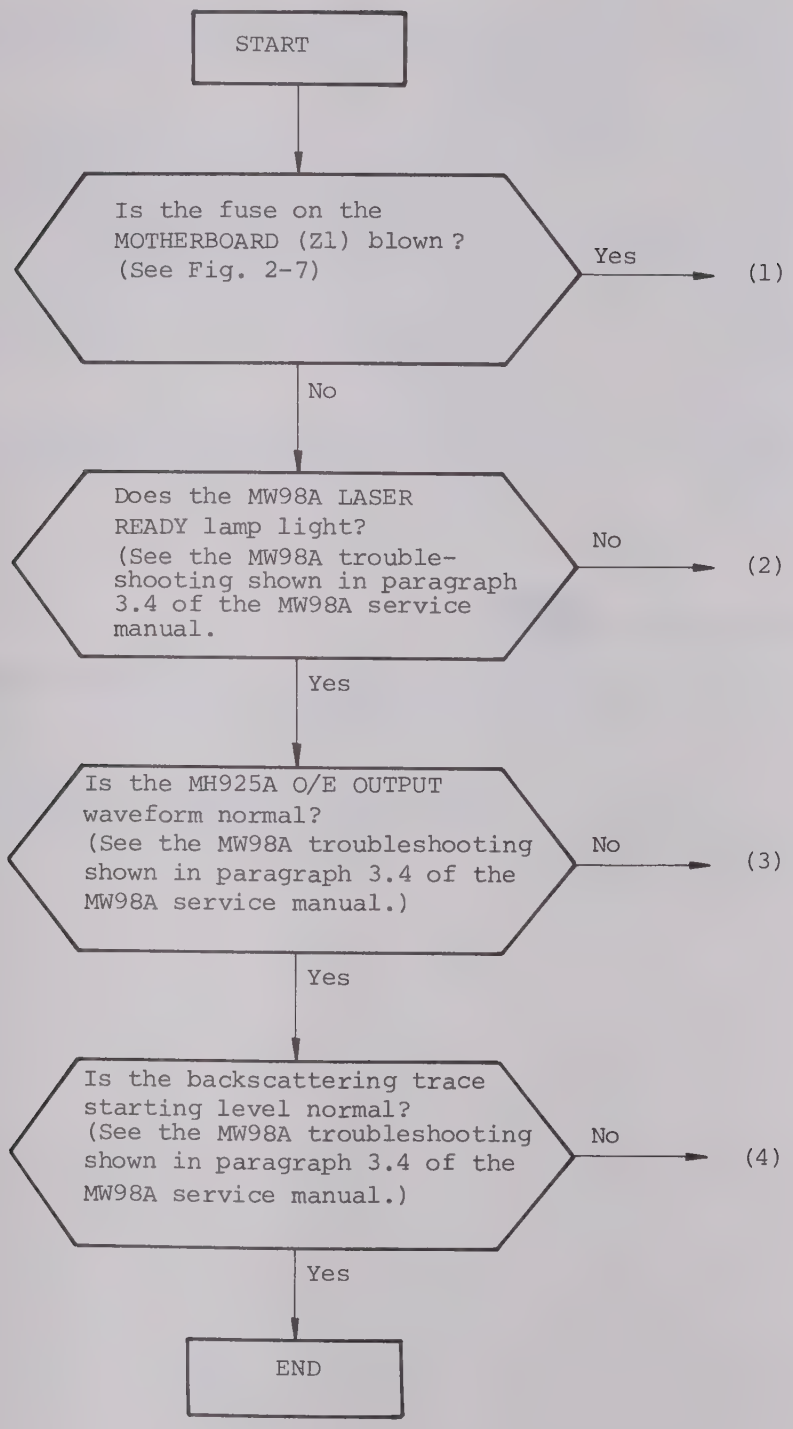

(1) The fuse on the MOTHERBOARD (Z1) is blown

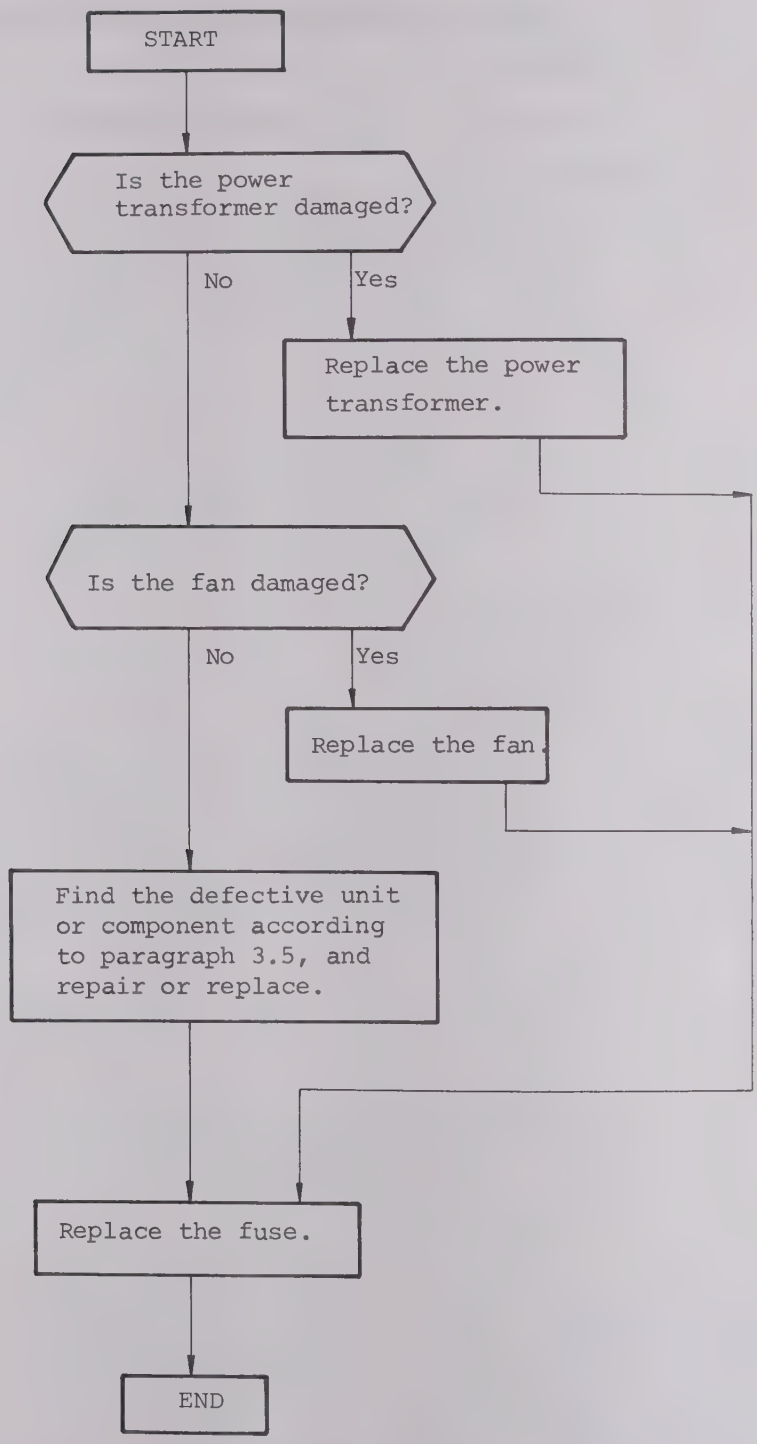

(2) When the MW98A LASER READY lamp is not lit

THERMO CONTROLLER (Z4) or LD MODULE (Z10) fault is assumed.

Replace either THERMO CONTROLLER (Z4) or LD MODULE (Z10).

For removing it, see Section 2.

After replacing THERMO CONTROLLER (Z4), adjust it and LD/AO CONTROL (Z2) in accordance with paragraphs 4.3.3 and 4.3.8.

(3) When the MH925A O/E OUTPUT waveform is abnormal.

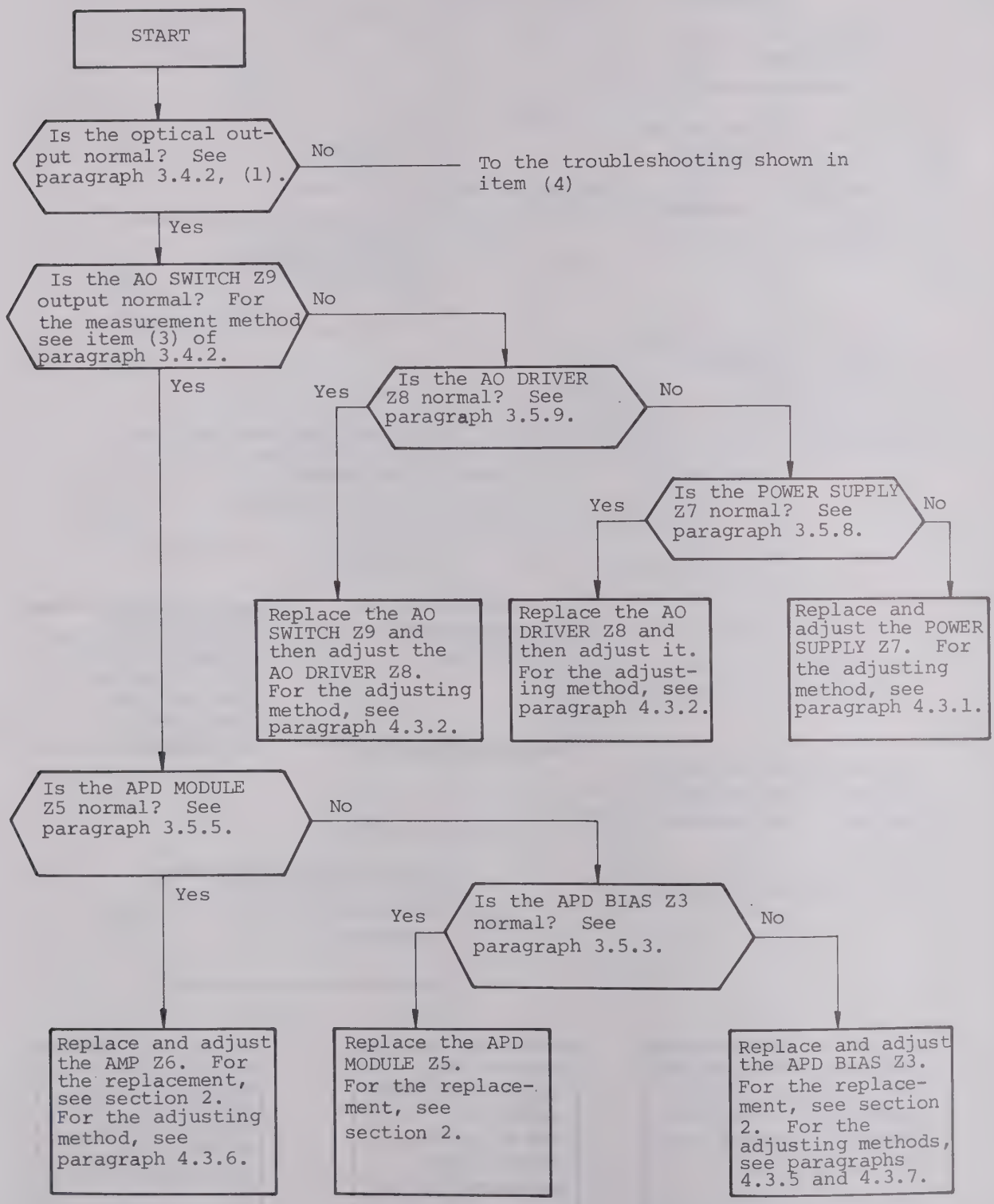

(4) When the backscattering trace starting level is abnormal.

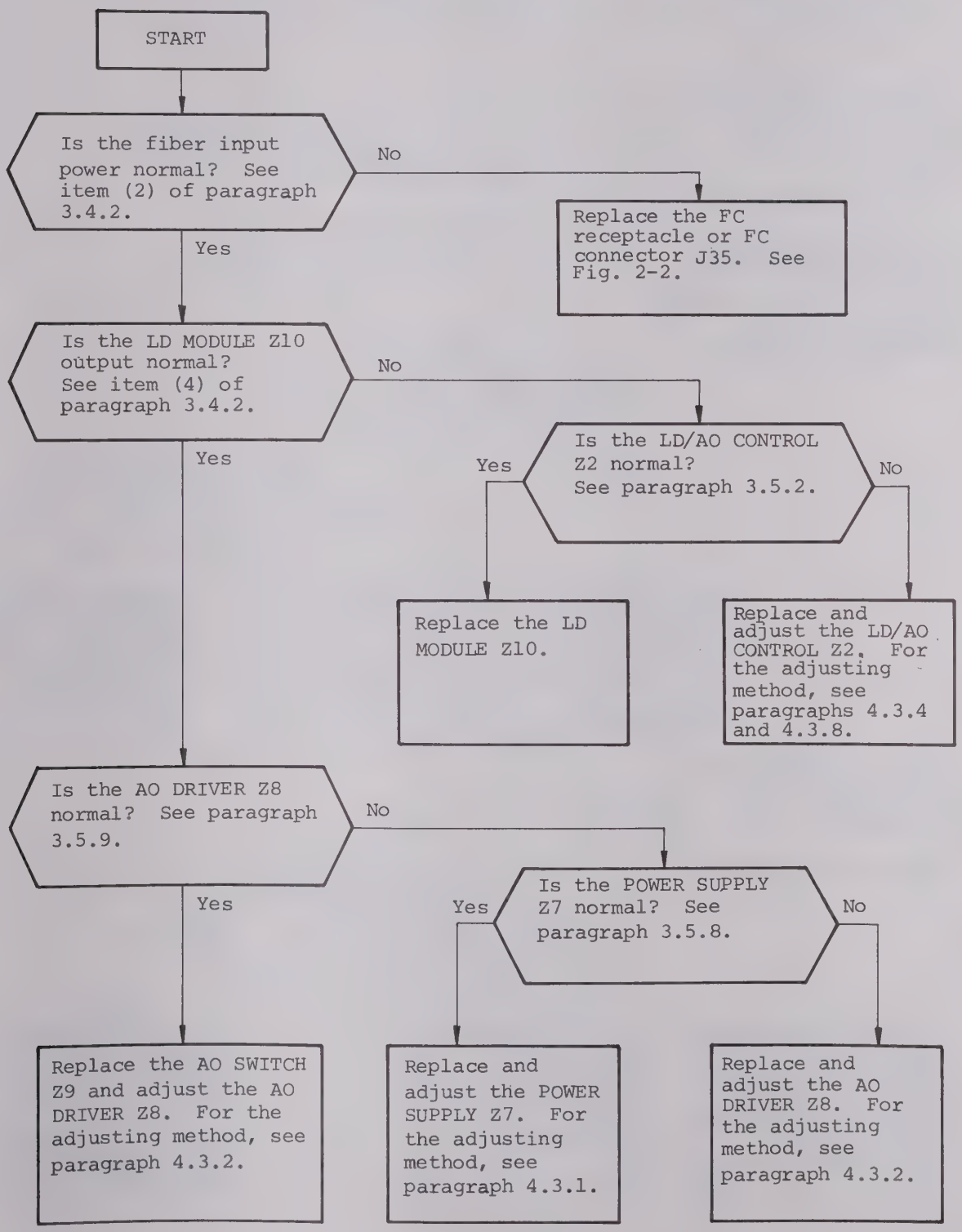

3.4.2 Troubleshooting Aid

(1) Laser output power measurement

Set-up

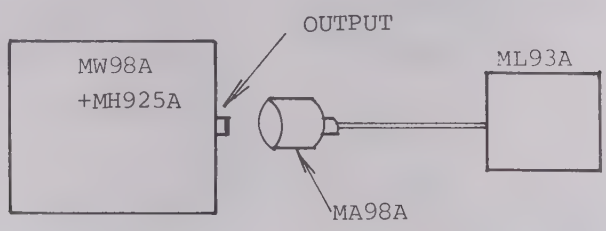

Procedure

Step	Procedure
1.	Remove cap of MA98A and draw the MA98A near the OUTPUT connector closely.
2.	Read the indication of ML93A.
3.	Calculate the laser output power. Laser output power $P = Po \times \frac{204.8}{2}$ (W) (Optical pulse width: 2μs Distance range: 18 km) Po: Value read by ML93A
4.	Confirm that the laser output power is +4 dBm or more.

(2) Fiber input power measurement

Set-up

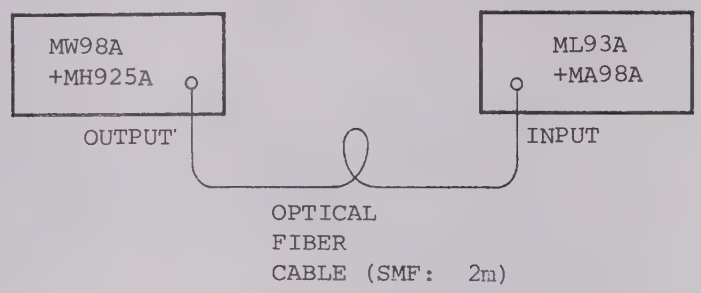

Procedure

Step	Procedure
1.	Connect the cable as shown above, and read the fiber input power with ML93A.
2.	Calculate the fiber input power.

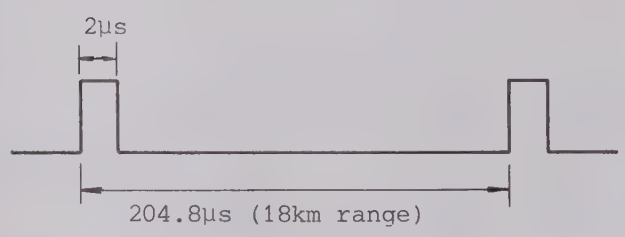

Fiber input power $P = Po \times \frac{204.8}{2}$ (W)

Po (W): Value read by ML93A

3.	Confirm that the fiber input power is +4 dBm or more.

(3) AO SWITCH Z9 check

(a) Through loss measurement

Remove all of AO fibers from the AO switch unit and connectors and set up the connection mentioned below.

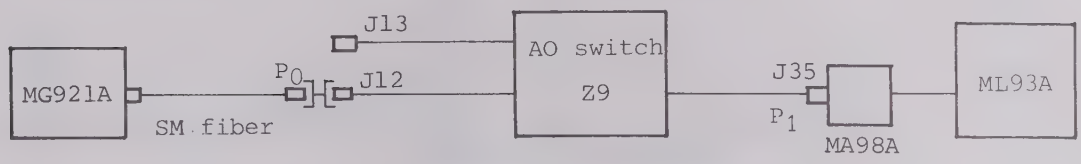

First connect the short SM fiber to MG921A and measure fiber output power P_0.

Next connect the AO switch and measure AO switch output power P_1. (AO driver on)

If $P_0 - P_1 \leqq 5$ dB, the AO switch through loss is normal.

(b) Diffracted loss measurement

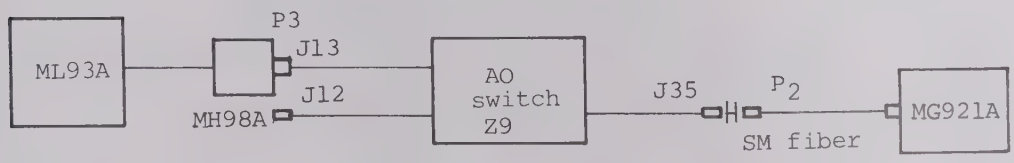

If $P_2 - P_3 \leqq 10$ dB, the AO switch diffracted loss is normal. (AO driver on)

(4) LD MODULE Z10 check

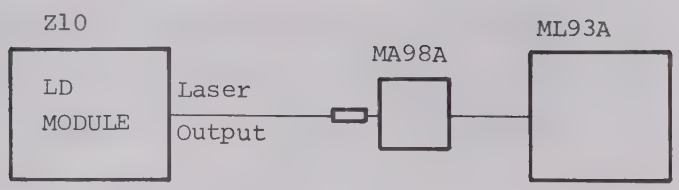

Step	Procedure
1.	Connect as above.
2.	Read the indication of ML93A.
3.	Calculate the laser output power.
	Laser output power $P = Po \times \frac{204.8}{2}$ (W) (Optical pulse width: 2μs, Distance range: 18 km)
	Po: Value read by ML93A
4.	Confirm that the laser output power is +4 dBm or more.
	If not, replace LD MODULE.

APPLICATION

REVISIONS

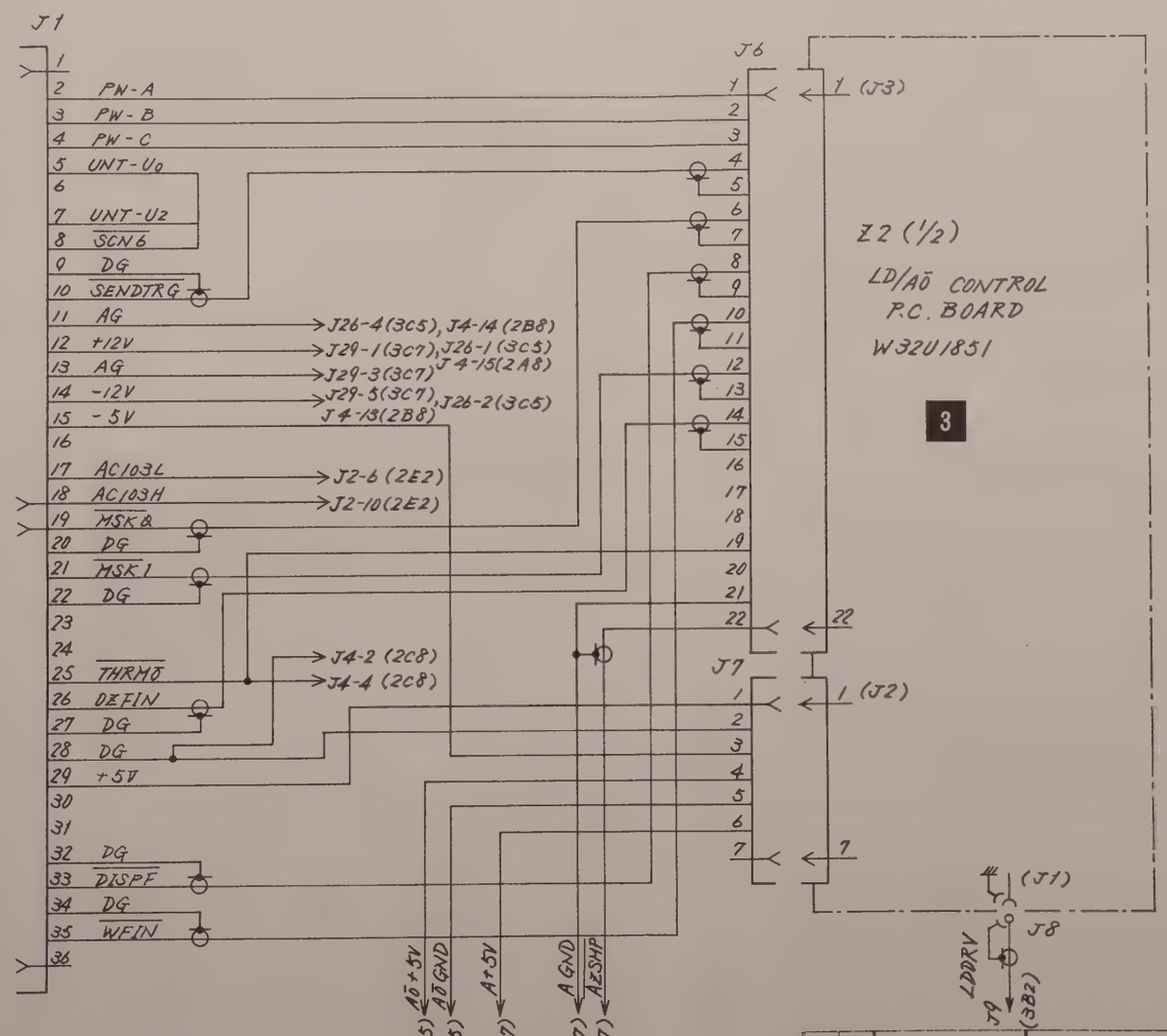

Component List : W4W4331

QTY	ITEM	PART NO.	DESCRIPTION	MATERIAL	FINISH

CHECKED BY | TRACED BY | SCALE
APPROVED BY | DRAWN BY

ANRITSU ELECTRIC
TOKYO JAPAN

1

TITLE
CIRCUIT DIAGRAM OF OPTICAL PLUG-IN UNIT MH925A

DRAWING NO
W3W1897 1/3

DEP

3-15/3-16

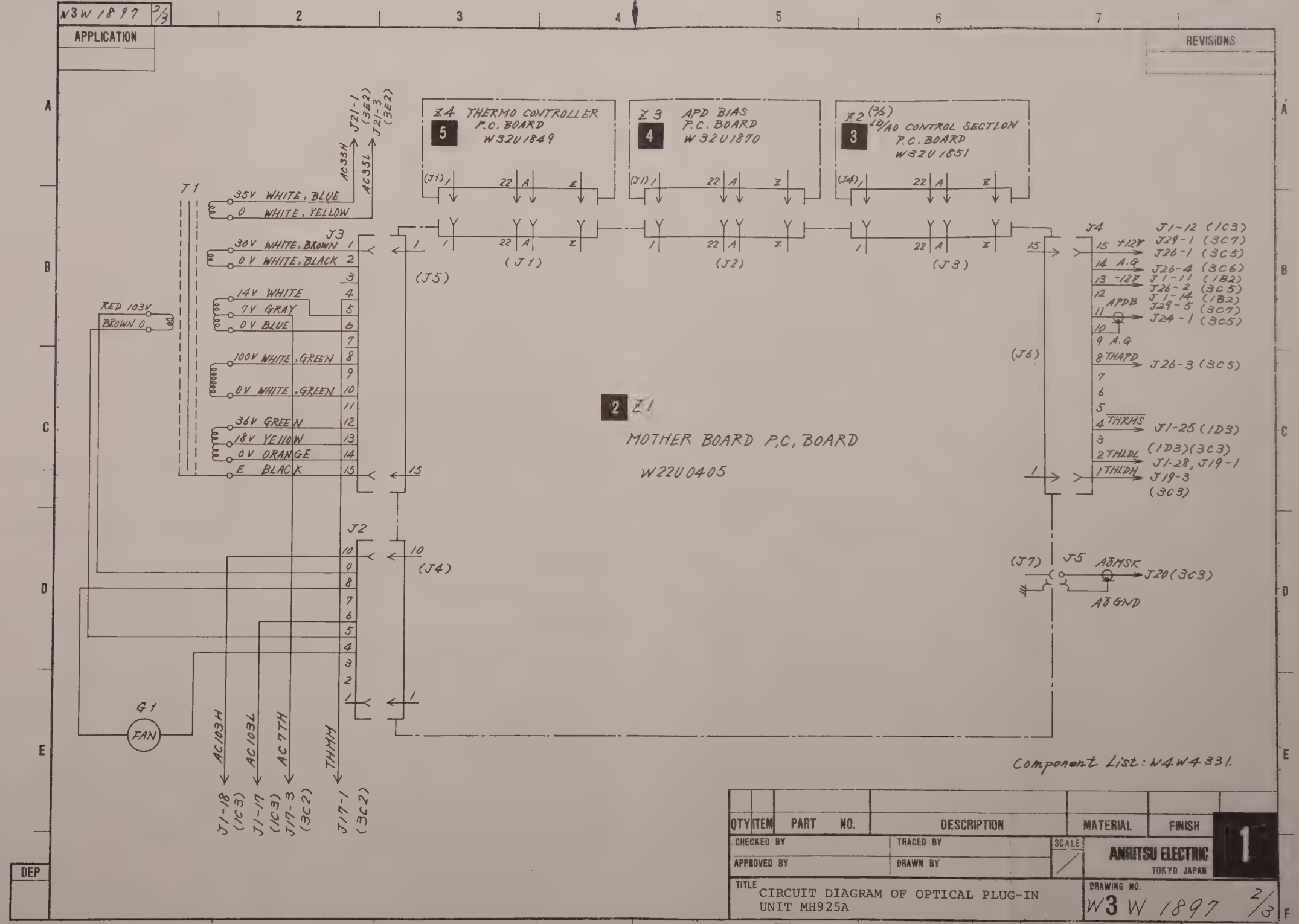
N3W1897 2/3
APPLICATION
REVISIONS
Z4 THERMO CONTROLLER P.C. BOARD W32U1849
5
Z3 APD BIAS P.C. BOARD W32U1870
4
Z2 (2/2) LD/AD CONTROL SECTION P.C. BOARD W32U1851
3
2 Z1
MOTHER BOARD P.C. BOARD
W22U0405
T1
35V WHITE, BLUE
0 WHITE, YELLOW
30V WHITE, BROWN
0V WHITE, BLACK
14V WHITE
7V GRAY
0V BLUE
100V WHITE, GREEN
0V WHITE, GREEN
36V GREEN
18V YELLOW
0V ORANGE
E BLACK
RED 103V
BROWN 0
G1
FAN
AC35H
AC35L
AC103H
AC103L
AC7TH
THMM
J21-1 (3E2)
J21-3 (3E2)
J1-18 (1C3)
J1-17 (1C3)
J17-3 (3C2)
J17-1 (3C2)
J3
J2
(J5)
(J4)
(J1)
(J2)
(J3)
(J6)
(J7)
J4
J5
+12V
A.G
-12V
APDB
THAPD
THRMS
THLDL
THLDH
ADMSK
AD GND
J1-12 (1C3)
J29-1 (3C7)
J26-1 (3C5)
J26-4 (3C6)
J1-11 (1B2)
J26-2 (3C5)
J1-14 (1B2)
J29-5 (3C7)
J24-1 (3C5)
J26-3 (3C5)
J1-25 (1D3)
(1D3)(3C3)
J1-28, J19-1
J19-3
(3C3)
J20 (3C3)
Component List: W4W4331.
QTY ITEM PART NO. DESCRIPTION MATERIAL FINISH
CHECKED BY
TRACED BY
SCALE
APPROVED BY
DRAWN BY
ANRITSU ELECTRIC
TOKYO JAPAN
1
TITLE CIRCUIT DIAGRAM OF OPTICAL PLUG-IN UNIT MH925A
DRAWING NO. W3W1897 2/3
DEP
A3
3-17/3-18

APPLICATION

REVISIONS

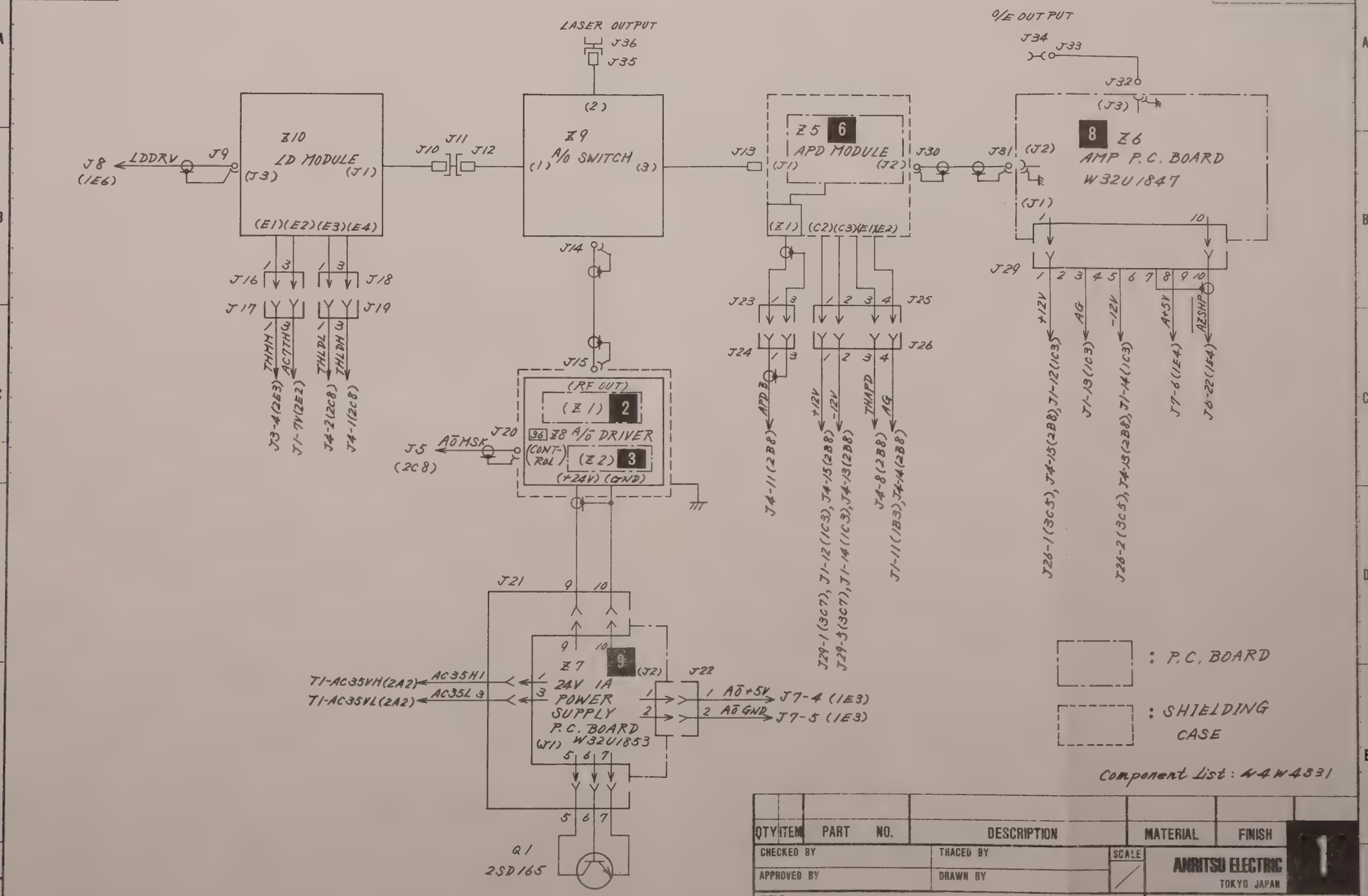

Component List : 44W4331

QTY	ITEM	PART NO.	DESCRIPTION	MATERIAL	FINISH

CHECKED BY	TRACED BY	SCALE	ANRITSU ELECTRIC TOKYO JAPAN
APPROVED BY	DRAWN BY		

TITLE
CIRCUIT DIAGRAM OF OPTICAL PLUG-IN UNIT MH925A

DRAWING NO. W3W 1897 3/3

DEP

A3

3-19/3-20

3.5 Troubleshooting of Each Unit 2 to 12

3.5.1 Z1 Motherboard 2

The motherboard consists of three 44-pin connectors and is connected to Z2, Z3, and Z4.

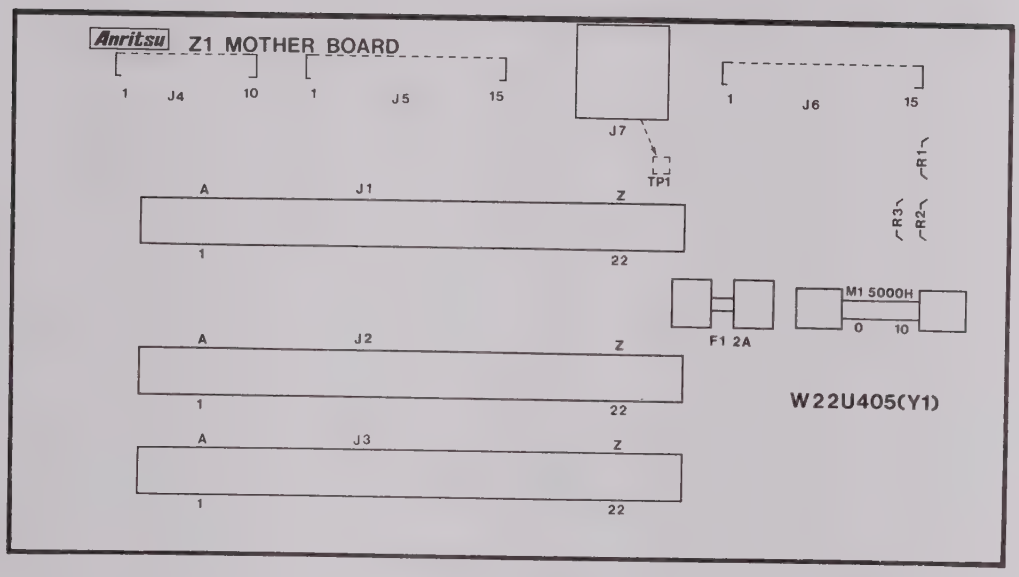

Component Layout of Z1

W3W 1898 1/2

APPLICATION

REVISIONS

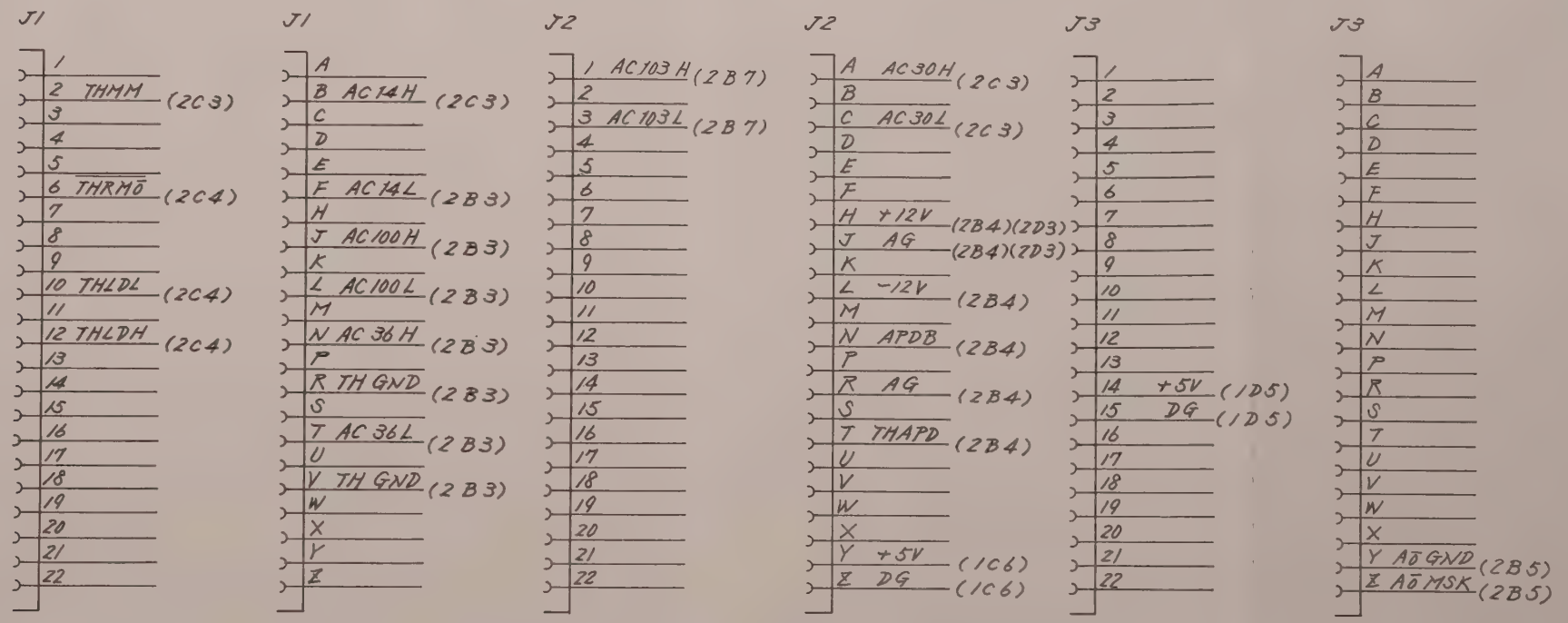

W22U 0405

Component List : W4W 4332

QTY	ITEM	PART NO.	DESCRIPTION	MATERIAL	FINISH

CHECKED BY | TRACED BY | SCALE | ANRITSU ELECTRIC TOKYO JAPAN | 2

APPROVED BY | DRAWN BY

TITLE CIRCUIT DIAGRAM OF Z1 MOTHERBOARD

DRAWING NO. W3W 1898 1/2

DEP

A3

3-23/3-24

APPLICATION

REVISIONS

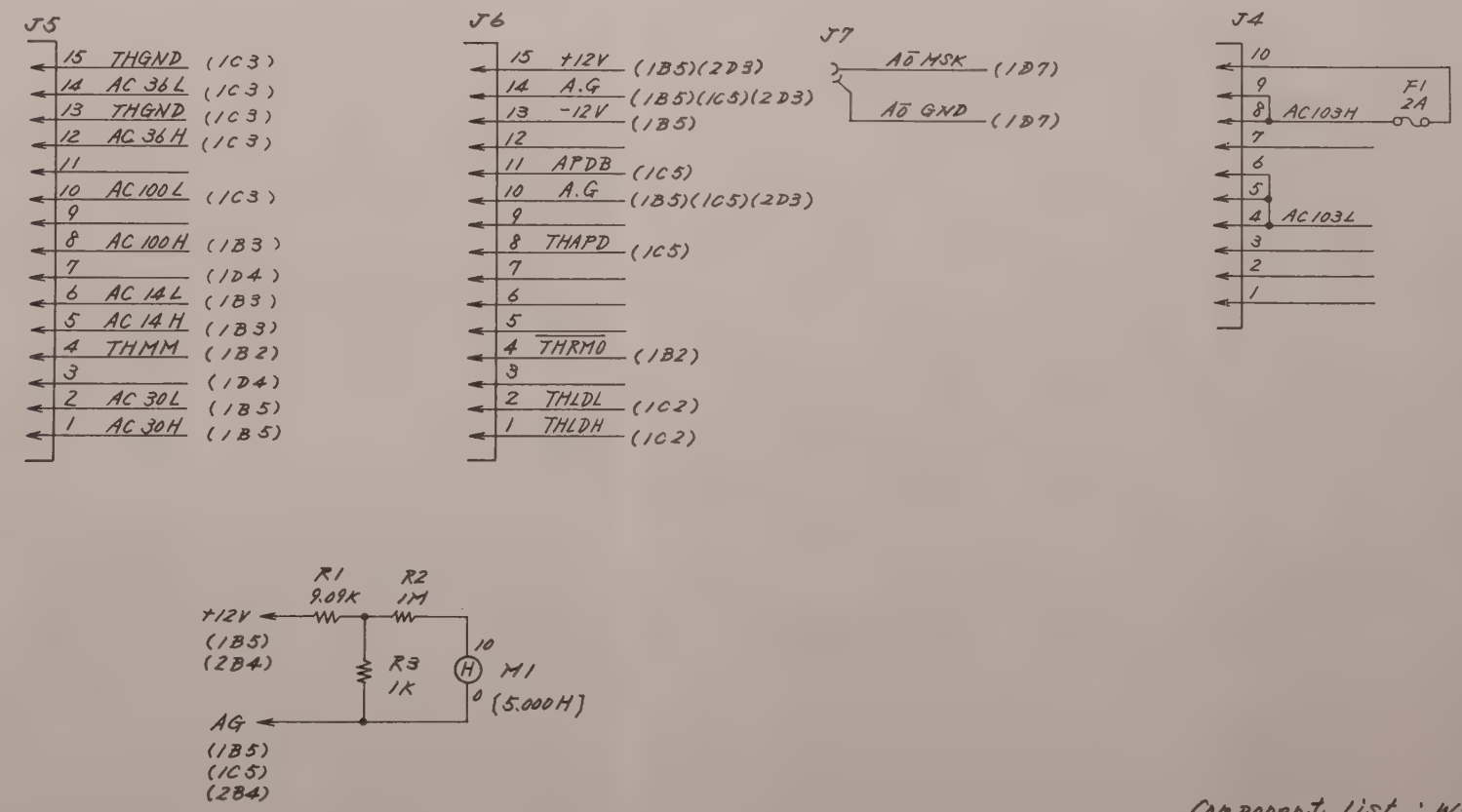

Component List : W4W4332

QTY	ITEM	PART NO.	DESCRIPTION	MATERIAL	FINISH

CHECKED BY | TRACED BY | SCALE

APPROVED BY | DRAWN BY

ANRITSU ELECTRIC TOKYO JAPAN

2

TITLE CIRCUIT DIAGRAM OF Z1 MOTHERBOARD

DRAWING NO. W3W1898 2/2

DEP

A3

3-25/3-26

3.5.2 Z2 LD/AO CONTROL 3

If the waveforms at ❶ to ❼ shown in Fig. 3-1 are normal, the LD/AO control unit is normal.

1

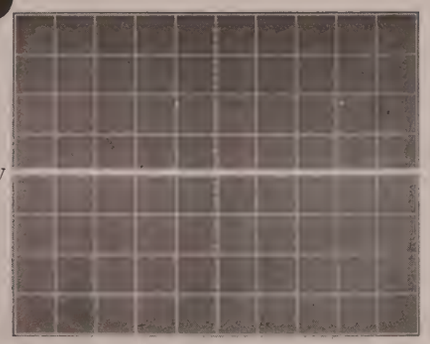

0V

2V/div
0.2ms/div

DISTANCE RANGE
= 72km

4

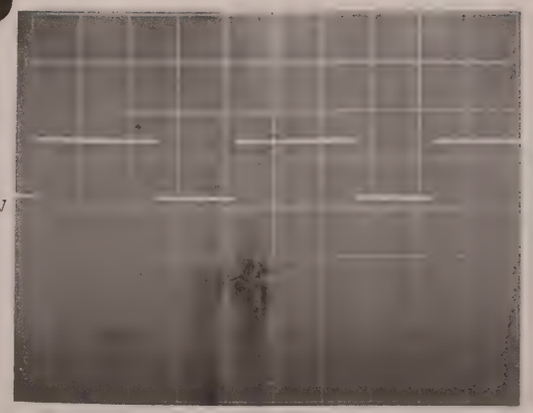

0V

2V/div
0.2ms/div

DISTANCE RANGE
= 72km

7

0V

2V/div
0.1ms/div

DISTANCE
RANGE
= 72km

2

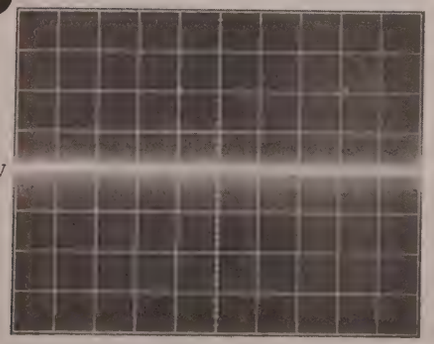

0V

2V/div
0.2ms/div

DISTANCE RANGE
= 72km

5

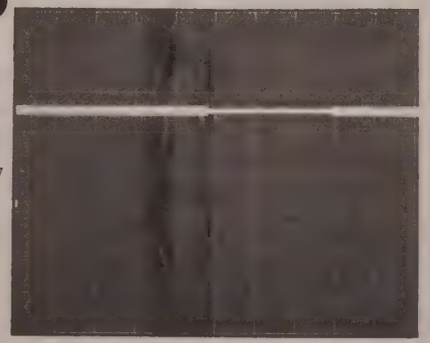

0V

2V/div
0.2ms/div

DISTANCE RANGE
= 72km

3

0V

2V/div
0.2ms/div

DISTANCE RANGE
= 72km

6

0V

2V/div
0.2ms/div

DISTANCE RANGE
= 72km

Fig. 3-1 Waveform of Z2

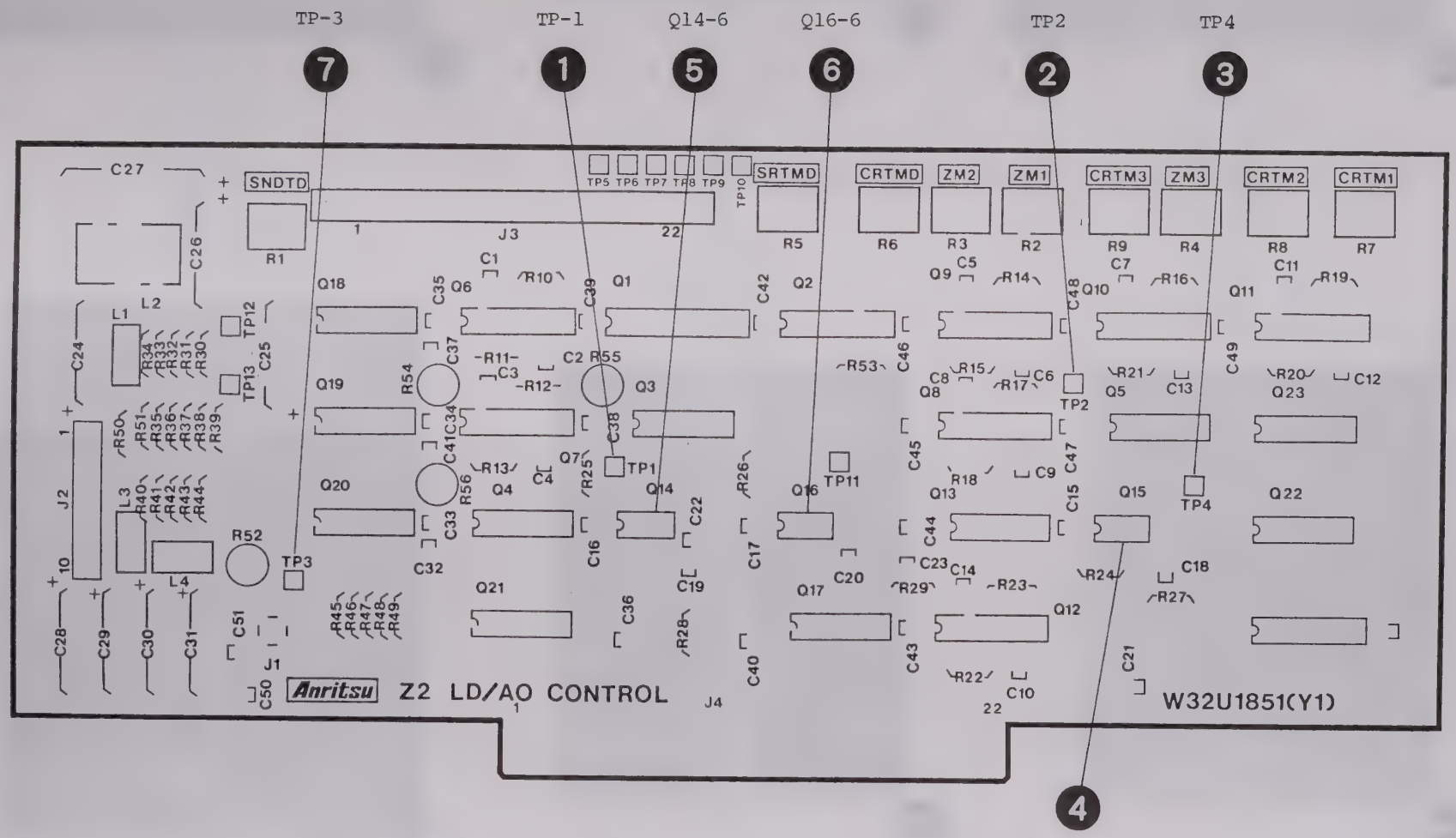

Component Layout of Z2

APPLICATION

REVISIONS

PW	C	B	A
100M (0)	0	0	0
500M (2)	0	1	0
2M (4)	1	0	0

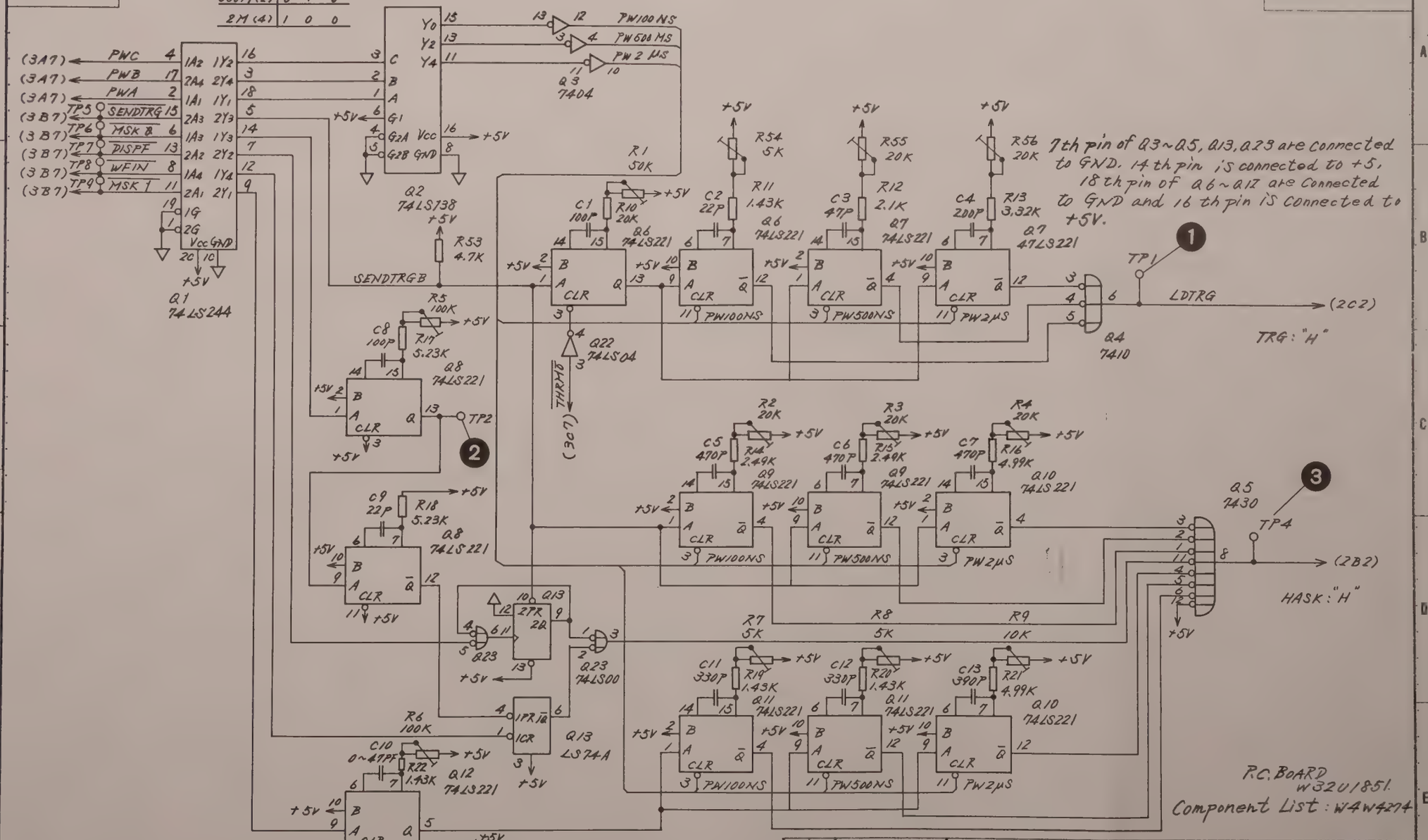

R.C. BOARD W32U1851.
Component List: W4W4274

QTY	ITEM	PART NO.	DESCRIPTION	MATERIAL	FINISH

CHECKED BY | TRACED BY | SCALE
APPROVED BY | DRAWN BY

ANRITSU ELECTRIC TOKYO JAPAN

TITLE: CIRCUIT DIAGRAM OF Z2 LD/AO CONTROL

DRAWING NO. W3W1886 1/3

DEP

APPLICATION

REVISIONS

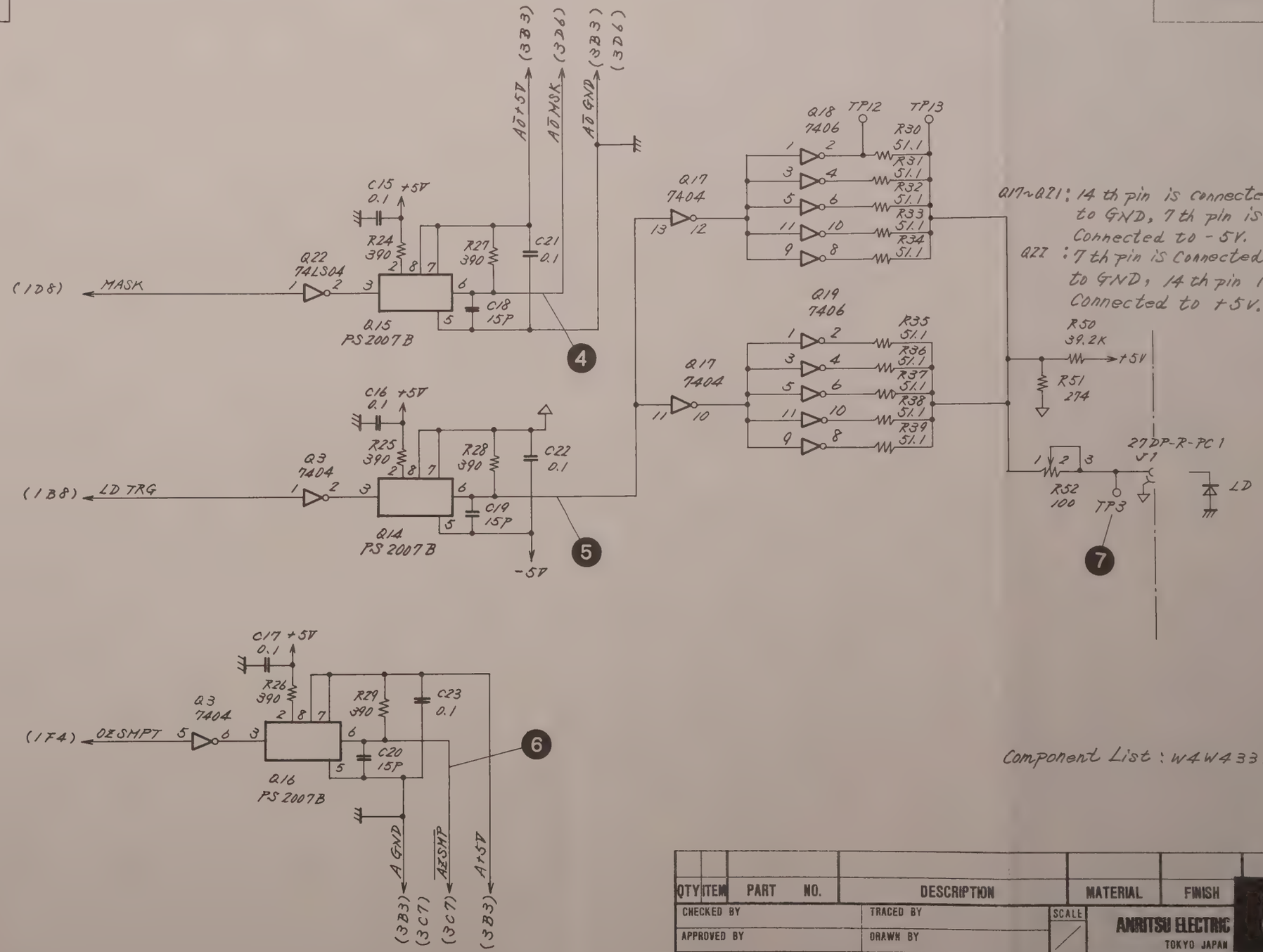

Q17~Q21: 14 th pin is connected to GND, 7 th pin is Connected to -5V.
Q22 : 7 th pin is Connected to GND, 14 th pin is Connected to +5V.

Component List : W4W4331

QTY	ITEM	PART NO.	DESCRIPTION	MATERIAL	FINISH

CHECKED BY | TRACED BY | SCALE | ANRITSU ELECTRIC TOKYO JAPAN | 3

APPROVED BY | DRAWN BY

TITLE: CIRCUIT DIAGRAM OF Z2 LD/AD CONTROL

DRAWING NO. W3W 1886 2/3

DEP

W3W 1886 3/3

APPLICATION

REVISIONS

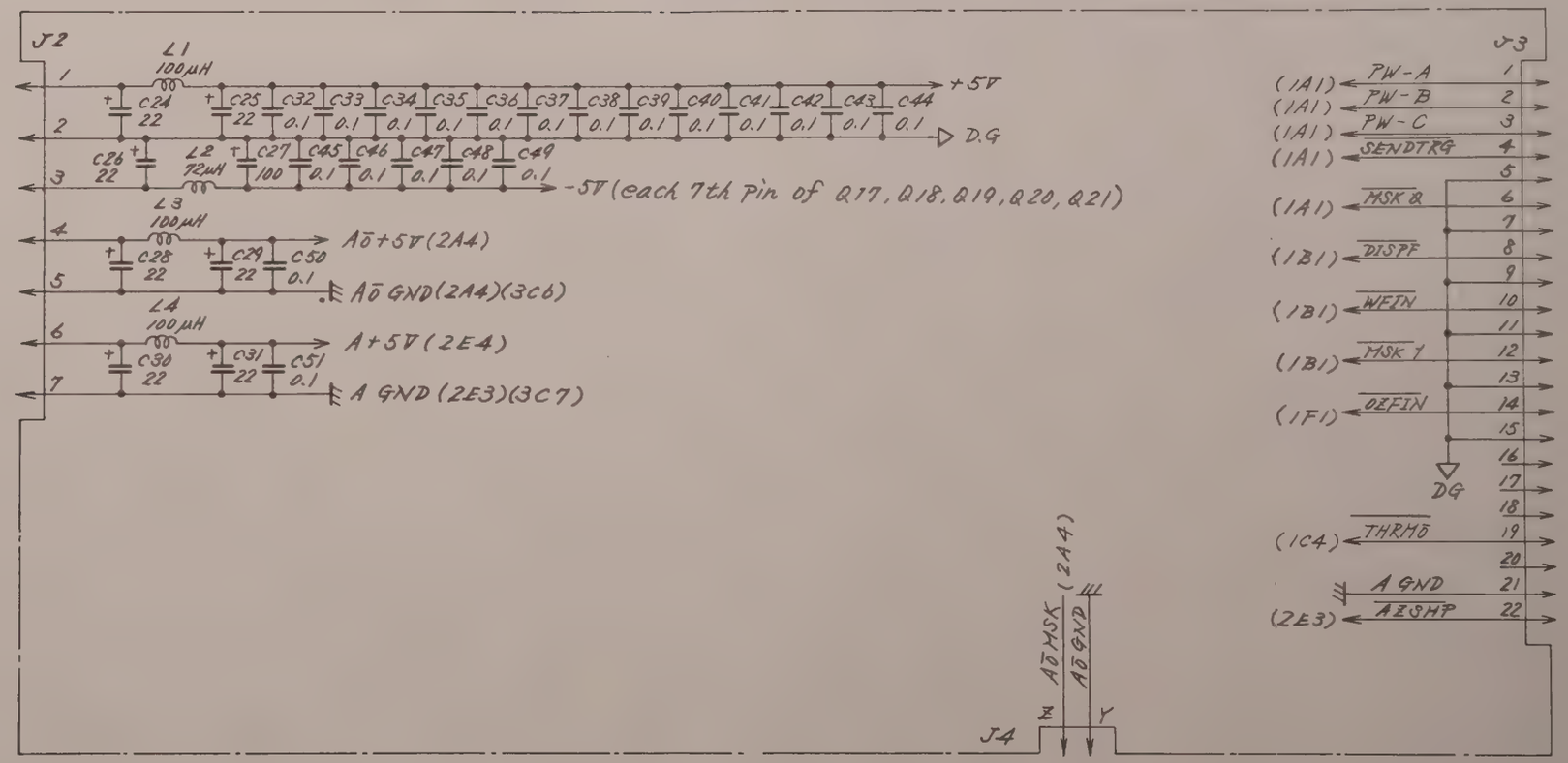

Component List: W4W4331

QTY	ITEM	PART NO.	DESCRIPTION	MATERIAL	FINISH

CHECKED BY | TRACED BY | SCALE

APPROVED BY | DRAWN BY

ANRITSU ELECTRIC TOKYO JAPAN

3

TITLE: CIRCUIT DIAGRAM OF Z2 LD/AD CONTROL

DRAWING NO. W3W 1886 3/3

DEP

A3

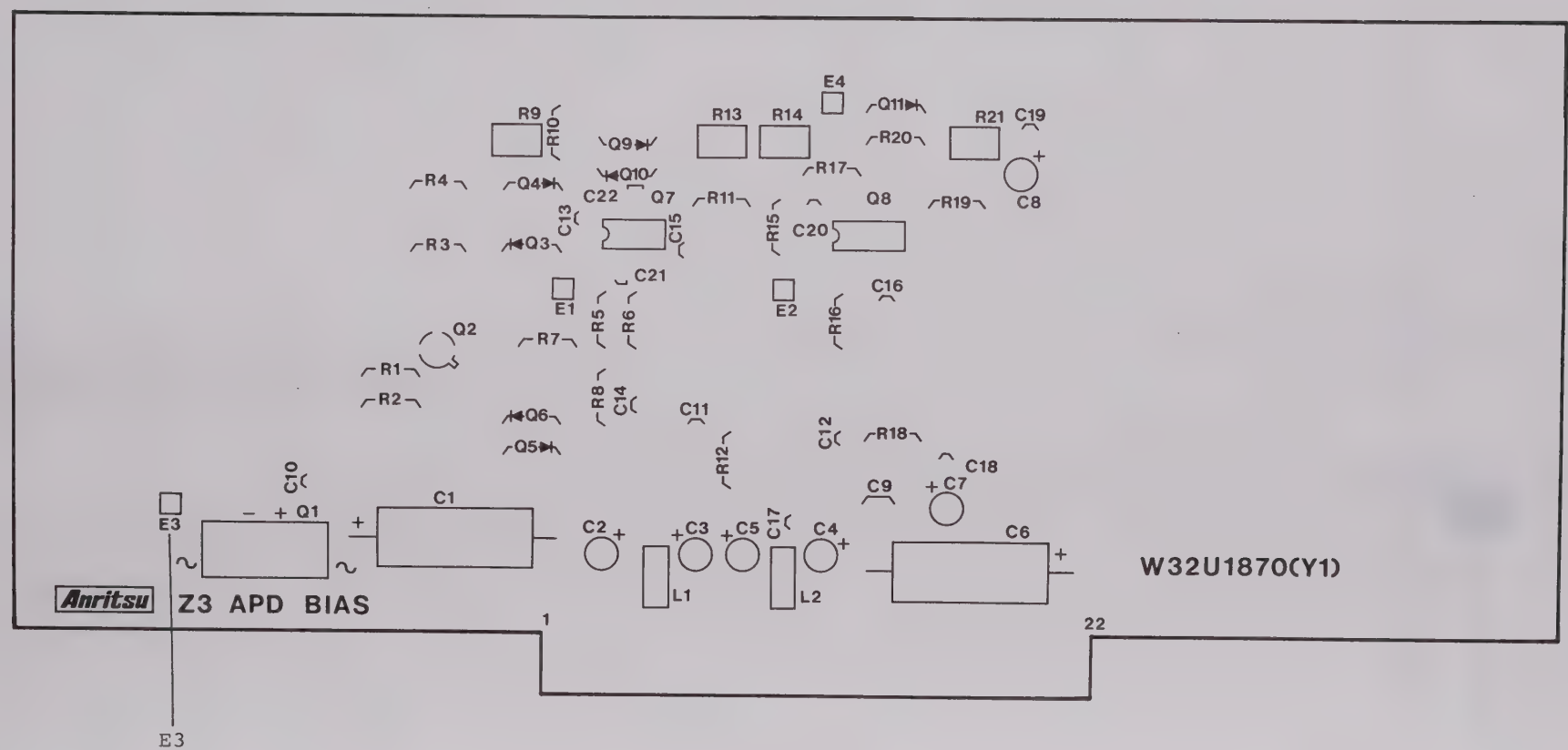

Component Layout of Z3

W3W1868 1/1

APPLICATION

REVISIONS

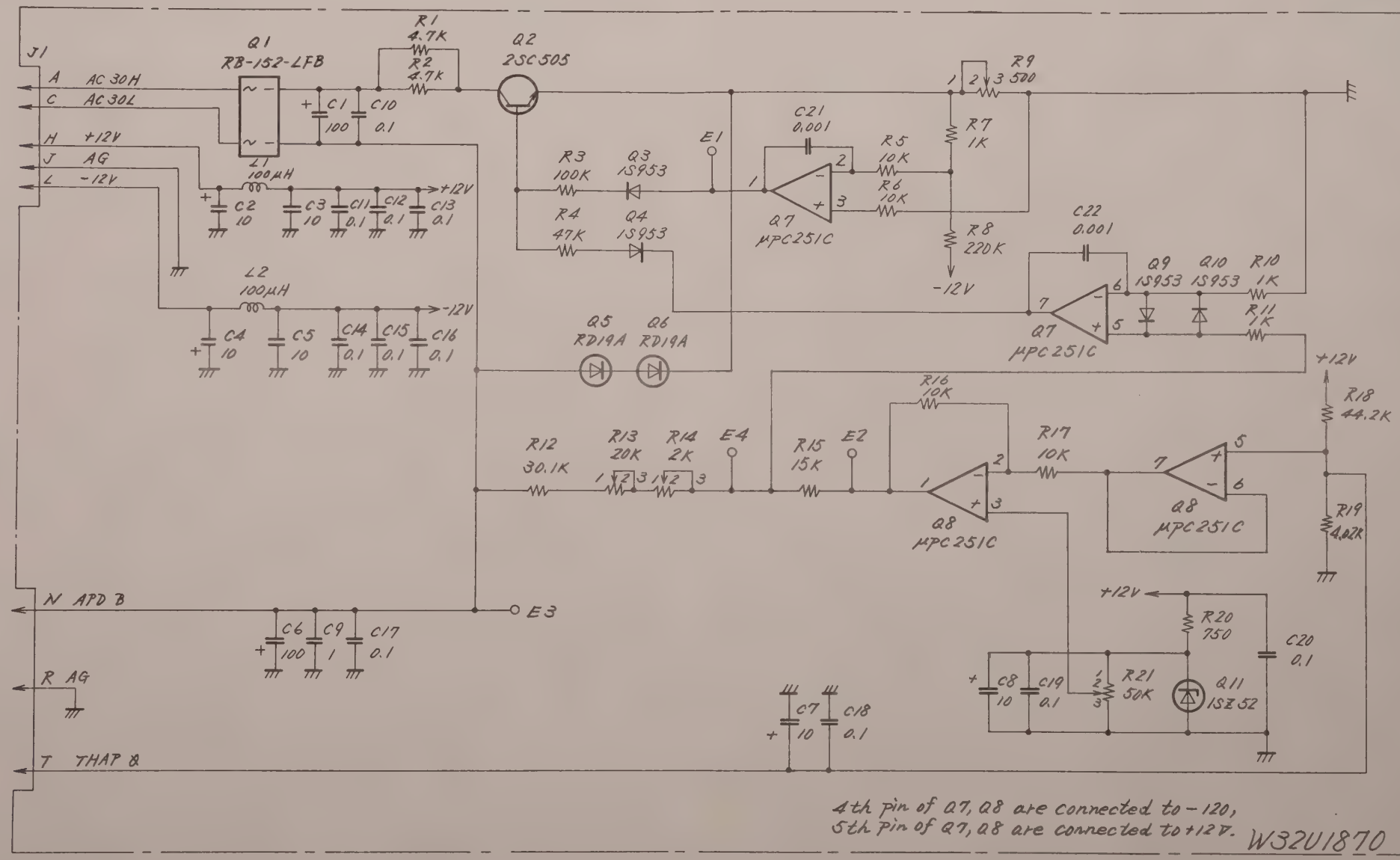

4th pin of Q7, Q8 are connected to −120,
5th pin of Q7, Q8 are connected to +12V.

W32U1870

Component List : W4W4244

QTY	ITEM	PART NO.	DESCRIPTION	MATERIAL	FINISH

CHECKED BY | TRACED BY | SCALE | ANRITSU ELECTRIC TOKYO JAPAN | 4

APPROVED BY | DRAWN BY

TITLE: CIRCUIT DIAGRAM OF Z3 APD BIAS

DRAWING NO. W3W1868 1/1

DEP

A3

3-39/3-40

3.5.4 Z4 THERMO CONTROLLER 5

Confirm that the voltages and waveform at ❶ to ❻ appear as follows. If not, replace this PC board.

Checkpoint		Voltage and waveform (at 25°C)
❶	:	-140 mV
❷	:	0.0 V
❸	:	

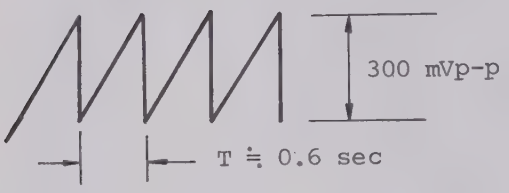

❹	:	-341 mV
❺	:	Approx. +0.2 V
❻	:	Approx. -0.2 V

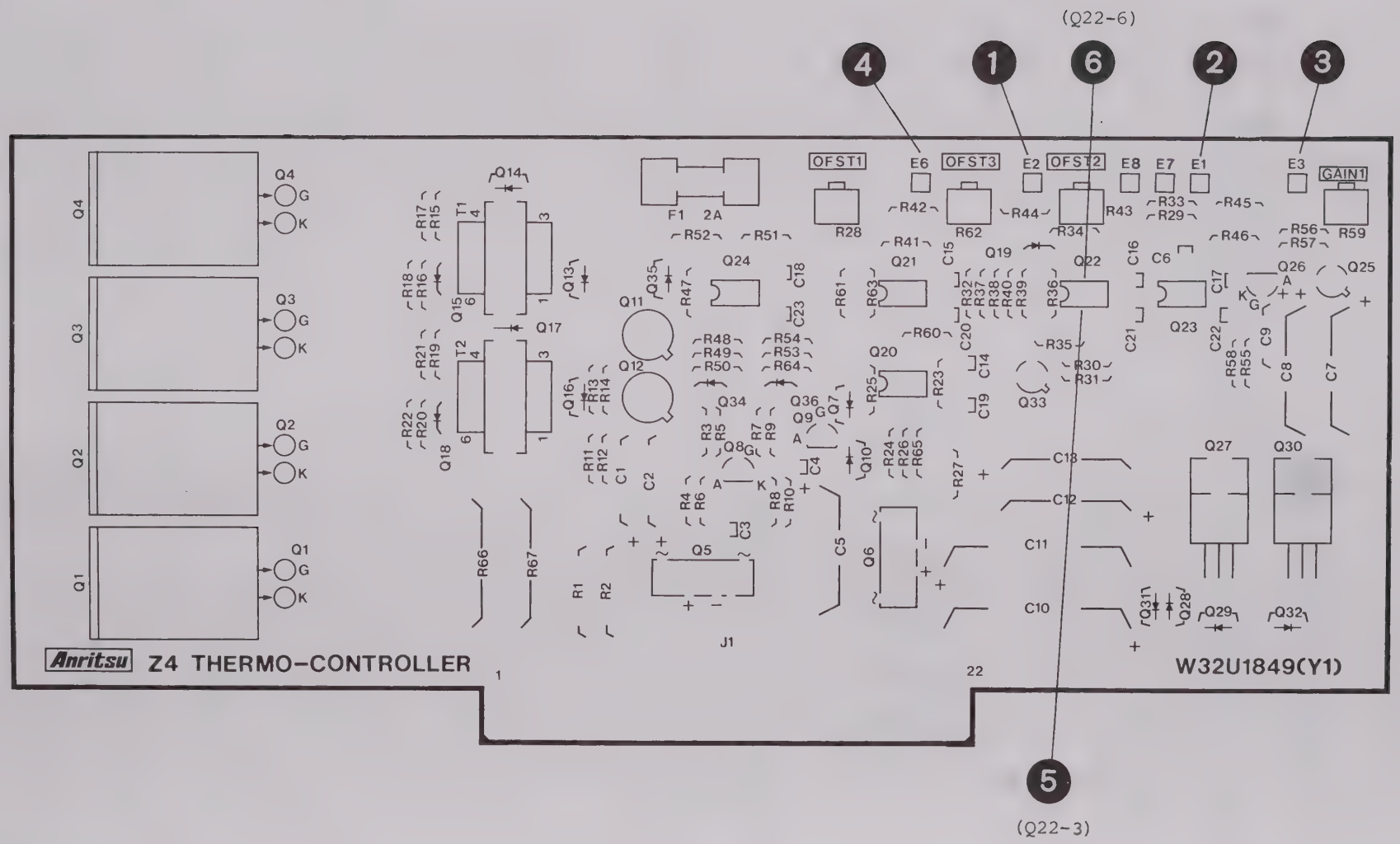

Component Layout of Z4

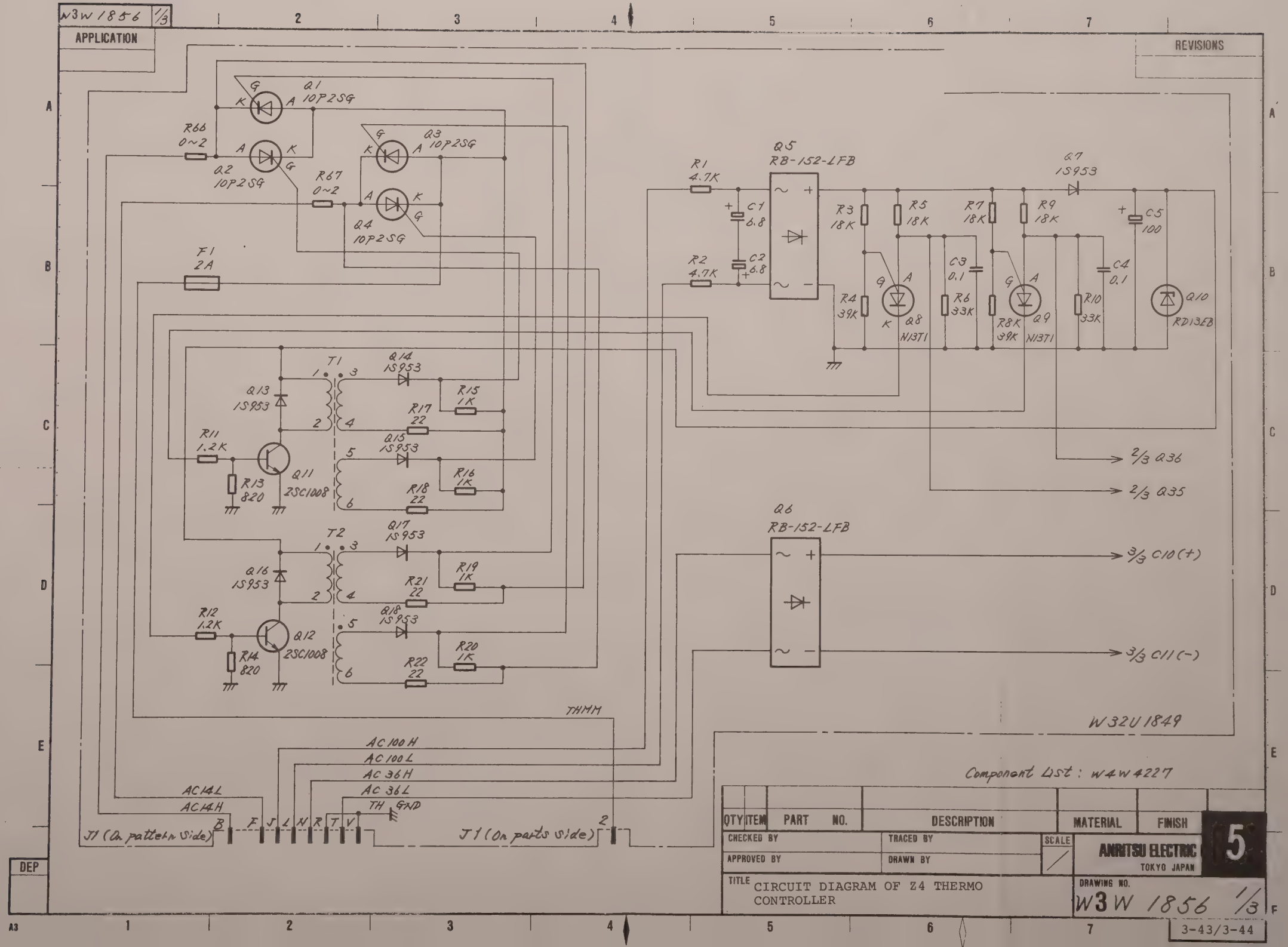
W3W 1856 1/3
APPLICATION
REVISIONS
Q1 10P2SG
Q2 10P2SG
Q3 10P2SG
Q4 10P2SG
R66 0~2
R67 0~2
F1 2A
Q5 RB-152-LFB
Q6 RB-152-LFB
Q7 1S953
Q8 N13T1
Q9 N13T1
Q10 RD13EB
R1 4.7K
R2 4.7K
C1 6.8
C2 6.8
C3 0.1
C4 0.1
C5 100
R3 18K
R4 39K
R5 18K
R6 33K
R7 18K
R8K 39K
R9 18K
R10 33K
T1
T2
Q11 2SC1008
Q12 2SC1008
Q13 1S953
Q14 1S953
Q15 1S953
Q16 1S953
Q17 1S953
Q18 1S953
R11 1.2K
R12 1.2K
R13 820
R14 820
R15 1K
R16 1K
R17 22
R18 22
R19 1K
R20 1K
R21 22
R22 22
2/3 Q36
2/3 Q35
3/3 C10(+)
3/3 C11(-)
THMM
W32U1849
AC100H
AC100L
AC36H
AC36L
AC14L
AC14H
TH
GND
J1 (On pattern side)
J1 (On parts side)
Component List : W4W4227
QTY ITEM PART NO. DESCRIPTION MATERIAL FINISH
CHECKED BY
TRACED BY
SCALE
APPROVED BY
DRAWN BY
ANRITSU ELECTRIC
TOKYO JAPAN
5
TITLE CIRCUIT DIAGRAM OF Z4 THERMO CONTROLLER
DRAWING NO. W3W 1856 1/3
DEP
A3
3-43/3-44

APPLICATION

REVISIONS

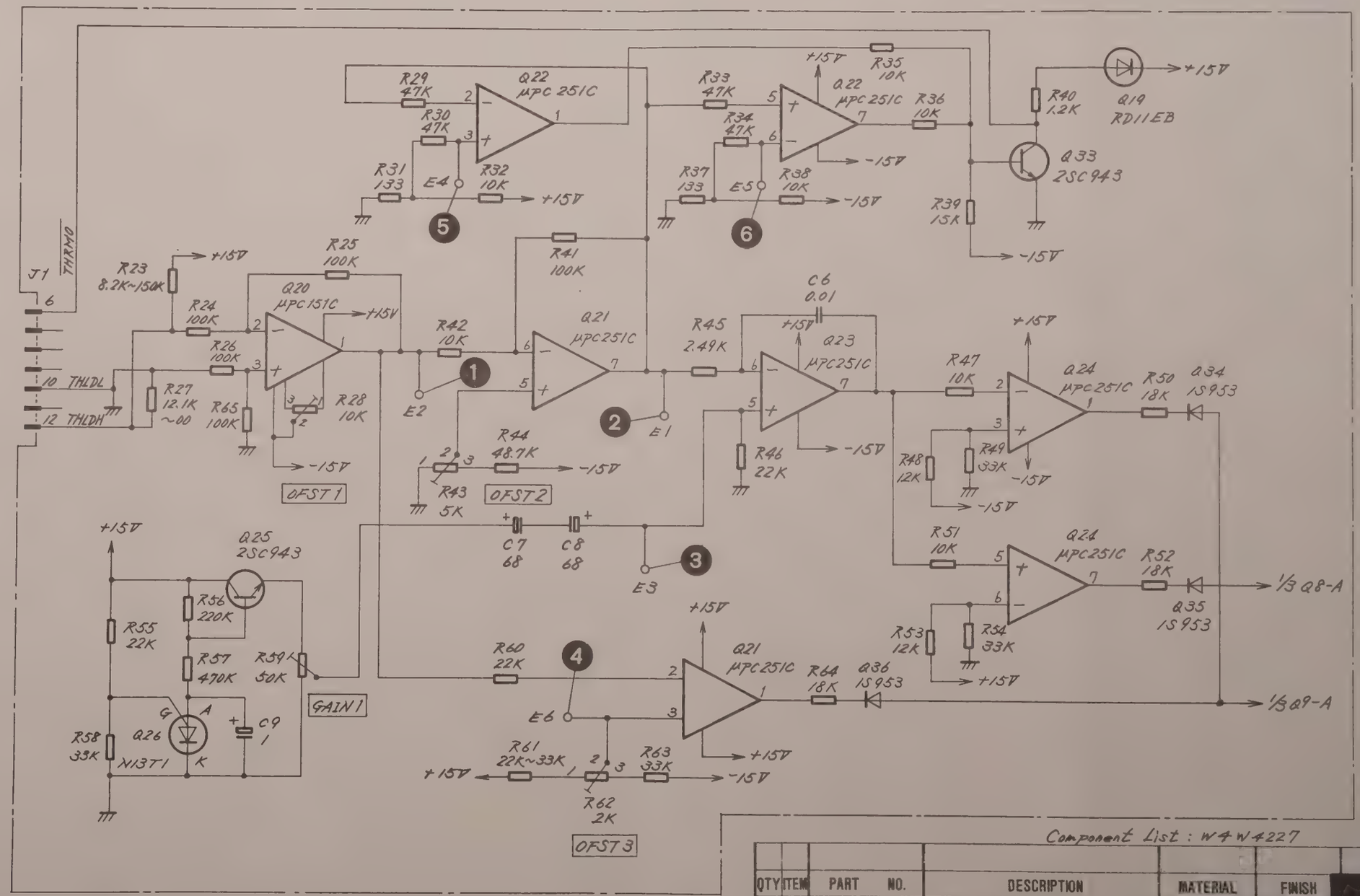

Component List : W4W4227

QTY	ITEM	PART NO.	DESCRIPTION	MATERIAL	FINISH

CHECKED BY	TRACED BY	SCALE	ANRITSU ELECTRIC TOKYO JAPAN
APPROVED BY	DRAWN BY		

TITLE CIRCUIT DIAGRAM OF Z4 THERMO CONTROLLER

DRAWING NO. W3W 1856 2/3

5

DEP

W3W 1856 3/3

APPLICATION

REVISIONS

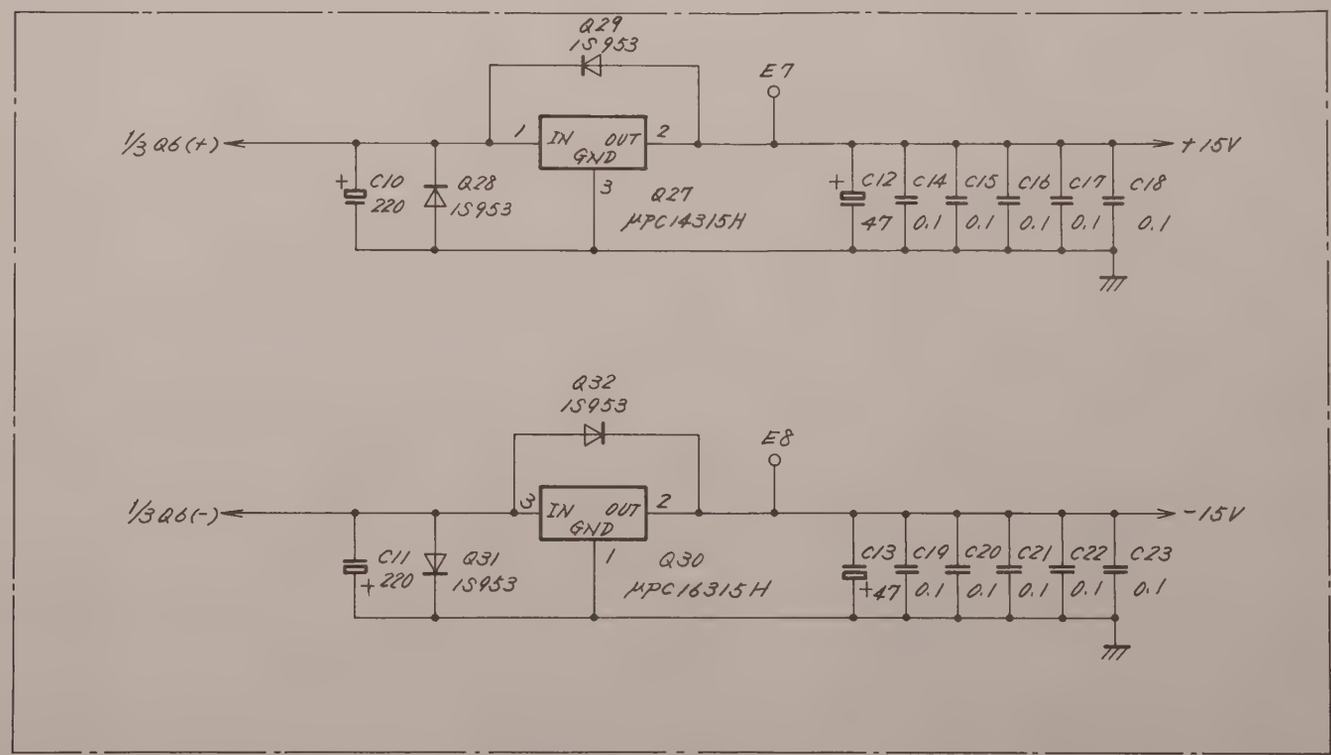

Component List : W4W 4227

QTY	ITEM	PART NO.	DESCRIPTION	MATERIAL	FINISH

CHECKED BY | TRACED BY | SCALE

APPROVED BY | DRAWN BY

ANRITSU ELECTRIC
TOKYO JAPAN

5

TITLE CIRCUIT DIAGRAM OF Z4 THERMO CONTROLLER

DRAWING NO. W3W 1856 3/3

DEP

A3

3-47/3-48

3.5.5 Z5 APD MODULE 6, Z2 in Z5 APD 7

Check (1) to (4)

(1) Are the voltages normal?

Z1: about -30 V, C2: +12 V, C3: -12 V

When Z1 is defective, the APD BIAS unit (Z3) is also faulty.

(2) Confirm whether R2 shorts or not to ground.

(3) Confirm whether APD anode or cathode shorts or not to ground.

(4) Remove the anode and cathode of APD from the PC board.

When removing them, pull out the soldering iron from the AC outlet.

Then insert 2.2 kΩ between the cathode and ground, and confirm that the offset level of the circuit changes smoothly.

If not, replace Q1.

If it changes smoothly, replace the APD module.

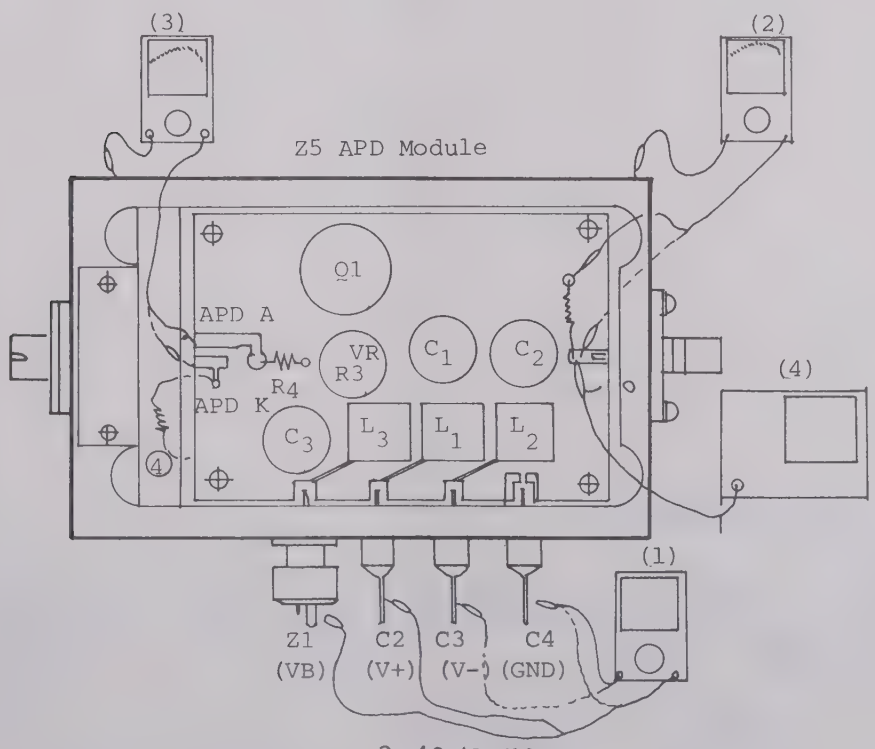

W4W1737 1/1

APPLICATION

REVISIONS

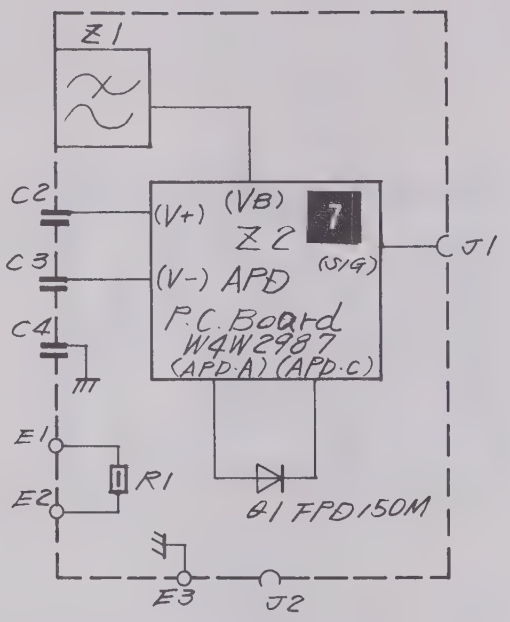

6

COMPONENT LIST : W4W1738

QTY	ITEM	PART NO.	DESCRIPTION	MATERIAL	FINISH	NOTE

CHECKED BY | TRACED BY | SCALE

APPROVED BY | DRAWN BY

ANRITSU ELECTRIC CO., LTD.
TOKYO JAPAN

DEP

TITLE
CIRCUIT DIAGRAM OF Z5 APD MODULE

DRAWING NO.
W4W1737 1/1

A4 1.000

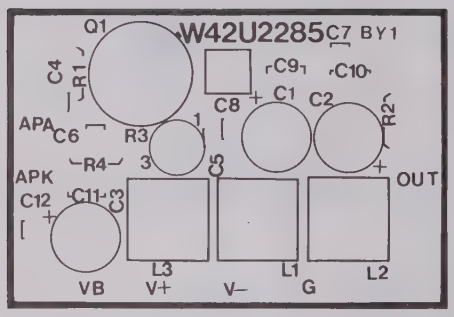

Component Layout of Z2 in Z5

W4W 2287 1/1

APPLICATION

REVISIONS

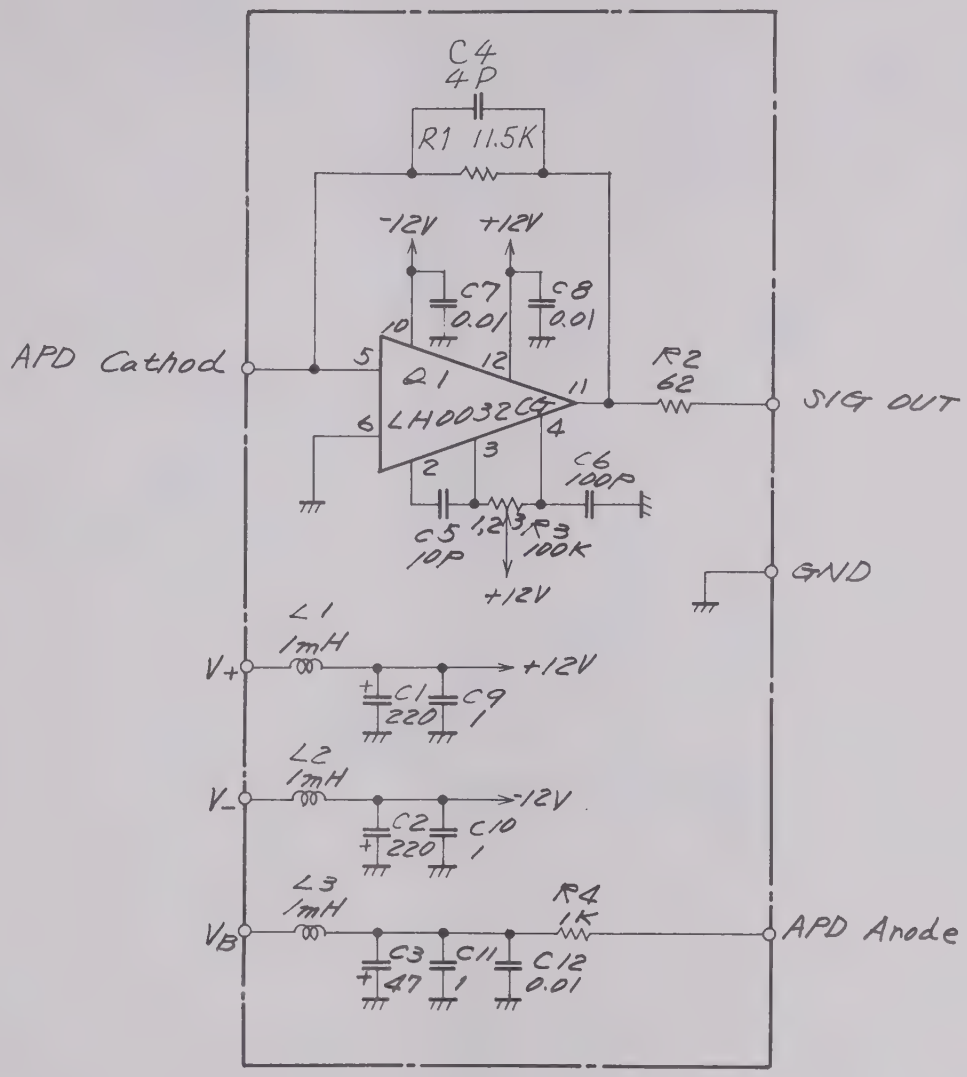

7

COMPONENT LIST: W4W2288

QTY	ITEM	PART NO.	DESCRIPTION	MATERIAL	FINISH	NOTE

CHECKED BY | TRACED BY | SCALE

APPROVED BY | DRAWN BY

ANRITSU ELECTRIC CO., LTD.
TOKYO JAPAN

DEP

TITLE
CIRCUIT DIAGRAM OF Z2 IN Z5 APD
PC BOARD

DRAWING NO.
W4W 2287 1/1

A4 1.000

3-53/3-54

3.5.6 Z6 AMP 8

Confirm that the voltages and waveform at ❶ to ❸ appear as follows. If not, replace this PC board.

Check Point		Voltage and Waveform (at 25°C)
❶	:	0.0 V
❷	:	0.0 V
❸	:	

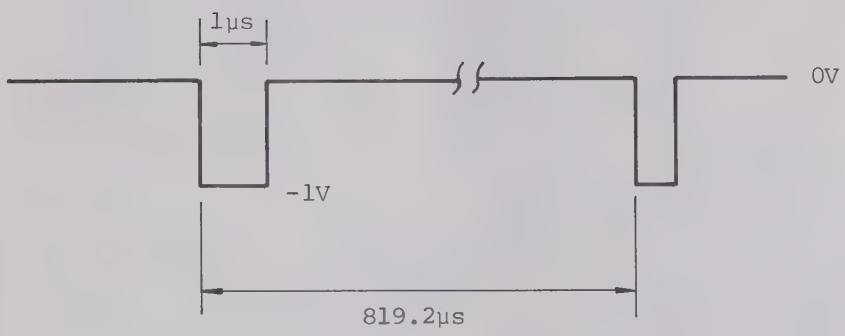

(DISTANCE RANGE = 72km)

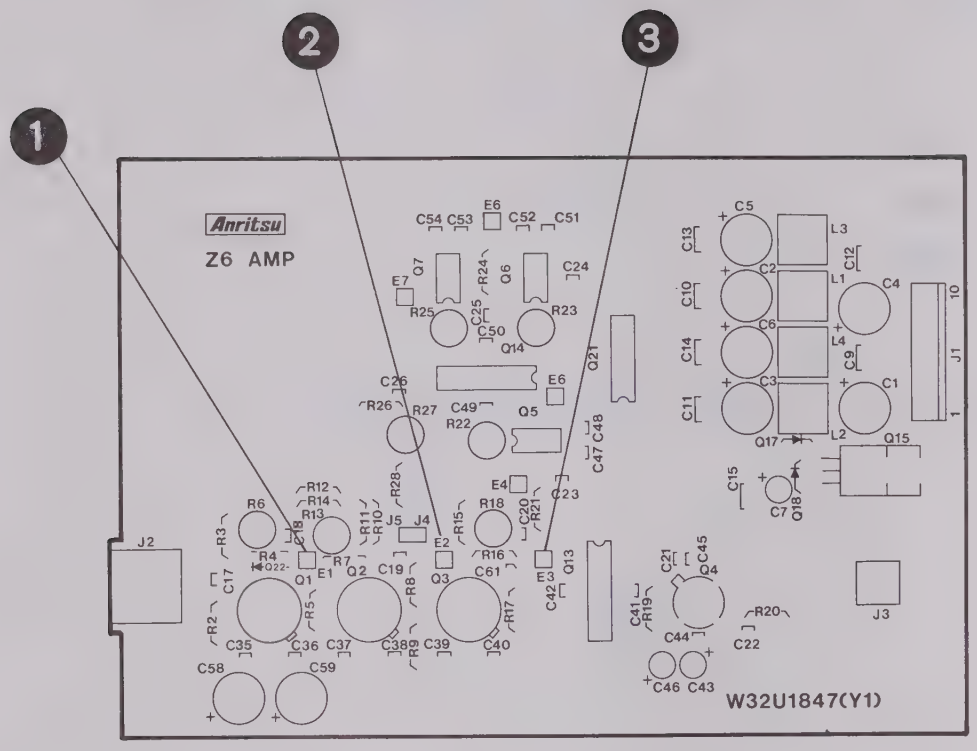

Component Layout of Z6

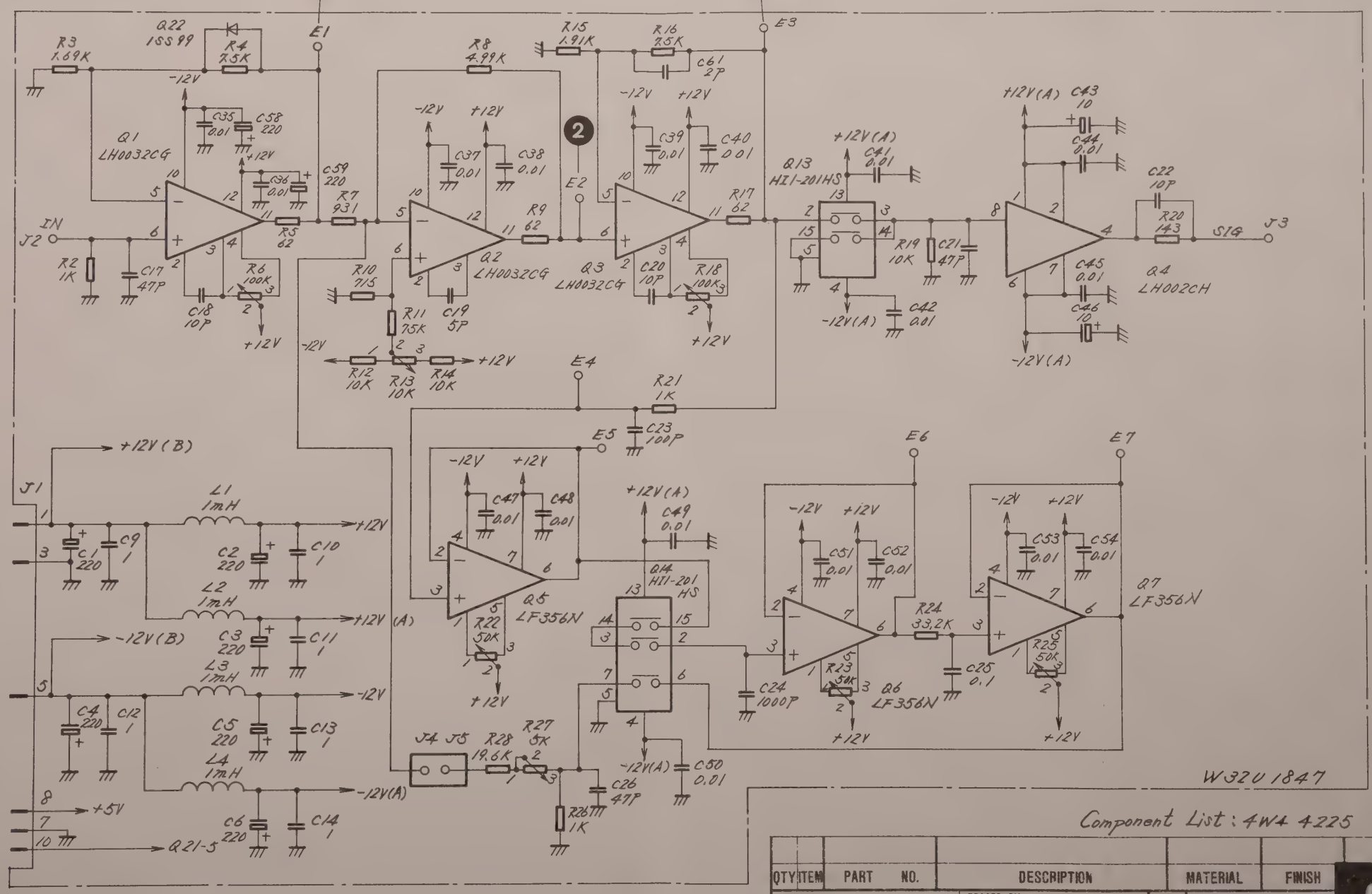
W3W 1855 1/2
APPLICATION
REVISIONS
Q22 1SS99
R3 1.69K
R4 7.5K
E1
R8 4.99K
R15 1.91K
R16 7.5K
C61 2P
E3
Q1 LH0032CG
C35 0.01
C58 220
C36 0.01
C59 220
R7 931
R5 62
IN J2
R2 1K
C17 47P
C18 10P
R6 100K
+12V
-12V
C37 0.01
C38 0.01
Q2 LH0032CG
R9 62
R10 715
R11 7.5K
C19 5P
R12 10K
R13 10K
R14 10K
E2
C39 0.01
C40 0.01
Q3 LH0032CG
R17 62
C20 10P
R18 100K
Q13 HI1-201HS
C41 0.01
R19 10K
C21 47P
C42 0.01
+12V(A)
-12V(A)
C43 10
C44 0.01
C45 0.01
C46 10
C22 10P
R20 143
SIG
J3
Q4 LH002CH
E4
R21 1K
C23 100P
E5
E6
E7
J1
+12V(B)
-12V(B)
L1 1mH
L2 1mH
L3 1mH
L4 1mH
C1 220
C9 1
C2 220
C10 1
C3 220
C11 1
C4 220
C12 1
C5 220
C13 1
C6 220
C14 1
+5V
Q21-5
C47 0.01
C48 0.01
Q5 LF356N
R22 50K
C49 0.01
Q14 HI1-201 HS
C51 0.01
C52 0.01
Q6 LF356N
R23 50K
R24 33.2K
C24 1000P
C25 0.1
C53 0.01
C54 0.01
Q7 LF356N
R25 50K
J4 J5
R28 19.6K
R27 5K
R26 1K
C26 47P
C50 0.01
W32U 1847
Component List: 4W4 4225
QTY ITEM PART NO. DESCRIPTION MATERIAL FINISH
CHECKED BY
TRACED BY
SCALE
APPROVED BY
DRAWN BY
AMRITSU ELECTRIC TOKYO JAPAN
8
TITLE CIRCUIT DIAGRAM OF Z6 AMP
DRAWING NO. W3W 1855 1/2
DEP
A3
3-57/3-58

W3W1855 2/2

APPLICATION

REVISIONS

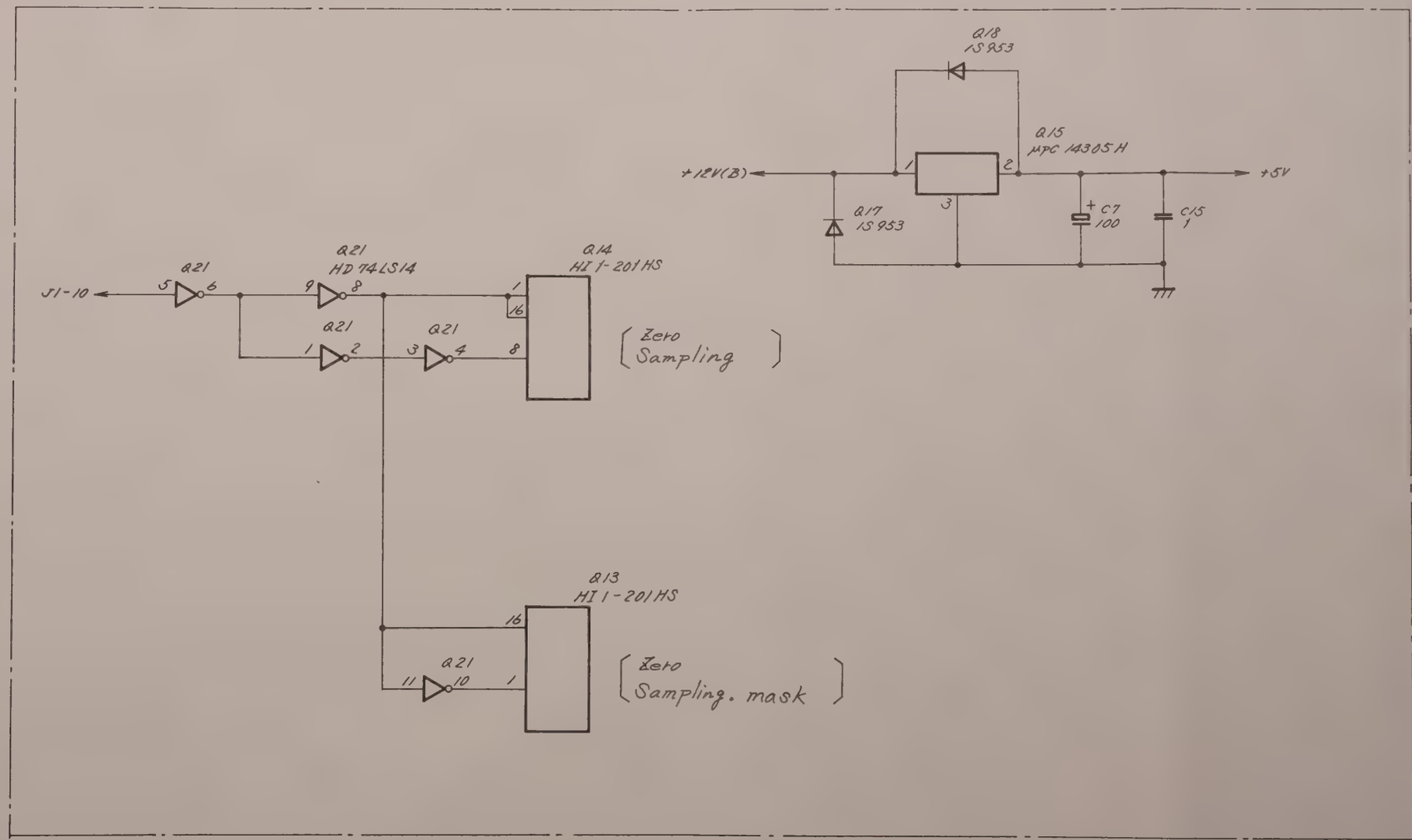

QTY	ITEM	PART NO.	DESCRIPTION	MATERIAL	FINISH

CHECKED BY | TRACED BY | SCALE

APPROVED BY | DRAWN BY

ANRITSU ELECTRIC
TOKYO JAPAN

8

TITLE
CIRCUIT DIAGRAM OF Z6 AMP

DRAWING NO.
W3W1855 2/2

DEP

A3

3-59/3-60

3.5.7 Z7 POWER SUPPLY 9

(1) Check the fuse F1.

(2) Check that +24 Vdc is output between ❶ and ground.

(3) Check that +5 Vdc is output between ❷ and ground.

(4) If the fuse F1 is blown or voltage checked at item (1) or (2) is abnormal, repair this unit according to the following procedure.

1. Check Q1 (1) and Q2 on Z7 (9) referring to paragraph 3.2.3.

   If Q1 and Q2 on Z7 are faulty, replace them.

2. If Q1 and Q2 on Z7 are normal, replace Z4 on Z7 (9).

3. If +5 Vdc is abnormal, check that the voltage at Q8-1 on Z7 is +24 V.

   If normal, replace Q8 on Z7.

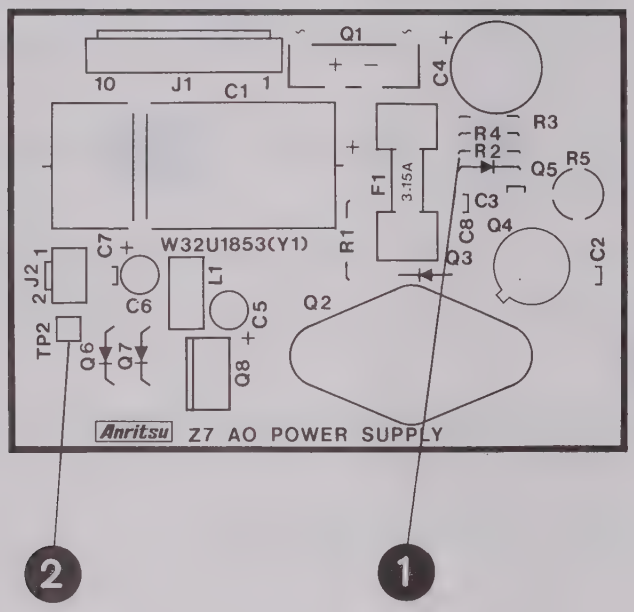

Component Layout of Z7

W4W 4205 1/2

APPLICATION

REVISIONS

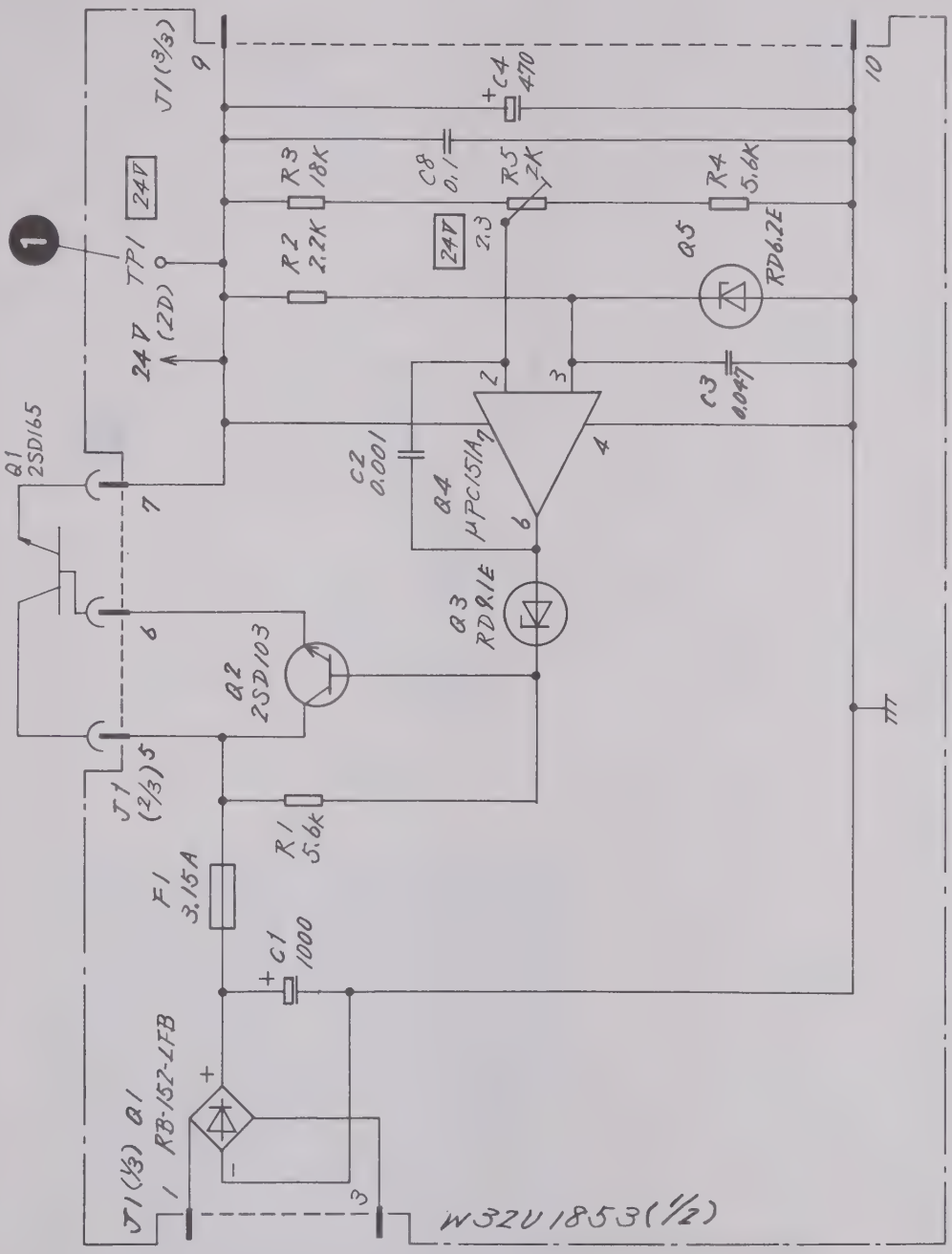

Component List : W4W4204

QTY	ITEM	PART NO.	DESCRIPTION	MATERIAL	FINISH

CHECKED BY | TRACED BY | SCALE

APPROVED BY | DRAWN BY

ANRITSU ELECTRIC TOKYO JAPAN

9

DEP

TITLE

CIRCUIT DIAGRAM OF Z7 POWER SUPPLY

DRAWING NO. W4W 4205 1/2

A4 1.000

3-63/3-64

W4W 4205 2/2

APPLICATION	REVISIONS

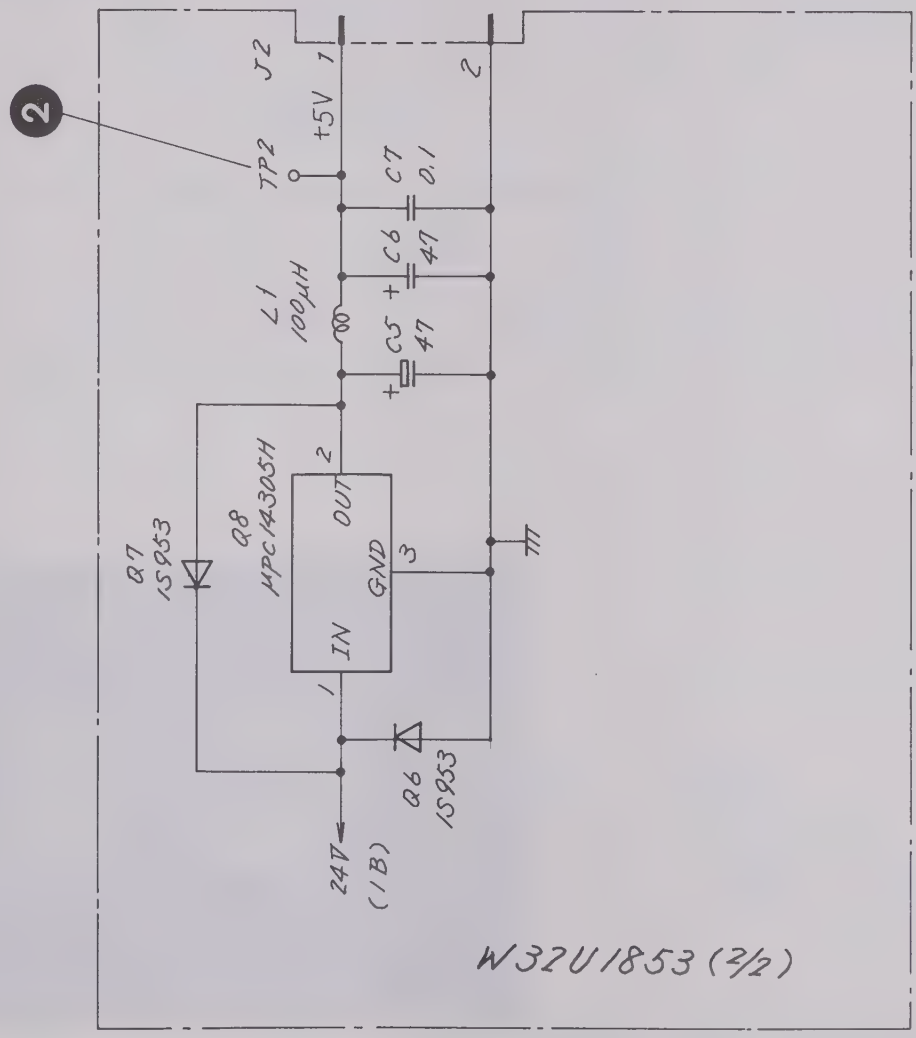

QTY	ITEM	PART NO.	DESCRIPTION	MATERIAL	FINISH

CHECKED BY	TRACED BY	SCALE	ANRITSU ELECTRIC TOKYO JAPAN
APPROVED BY	DRAWN BY	/	

DEP

TITLE: CIRCUIT DIAGRAM OF Z7 POWER SUPPLY

DRAWING NO. W4W 4205 2/2

9

A4 1,000

3-65/3-66

3.5.8 Z8 AO DRIVER 10 , Z1 in Z8 X'TAL OSCILLATOR 11 , Z2 in Z8 AMP PC BOARD 12

Check the RF output waveform of Z8 AO DRIVER by using the method shown below.

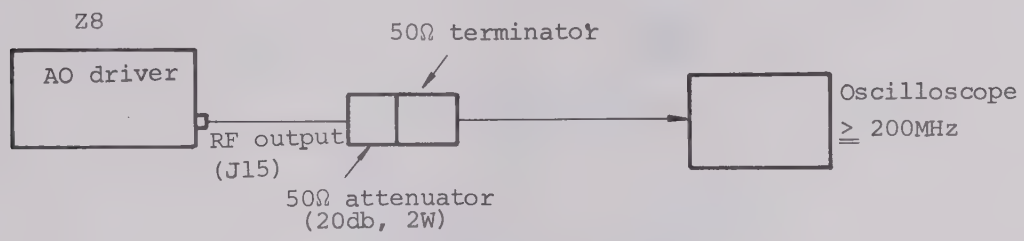

The RF output waveform is shown in Fig. 3-2.

Check that such a waveform is output.

In addition, check that the peak to peak voltage of this waveform is the same as indicated at the side of the AO switch.

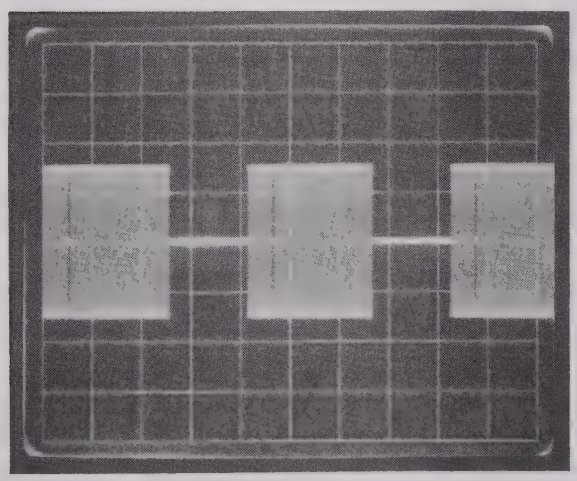

-0V

10V/div
0.2ms/div

DISTANCE RANGE
= 72km

Fig. 3-2 Waveform of RF Output

W4W3146 1/1

APPLICATION

REVISIONS

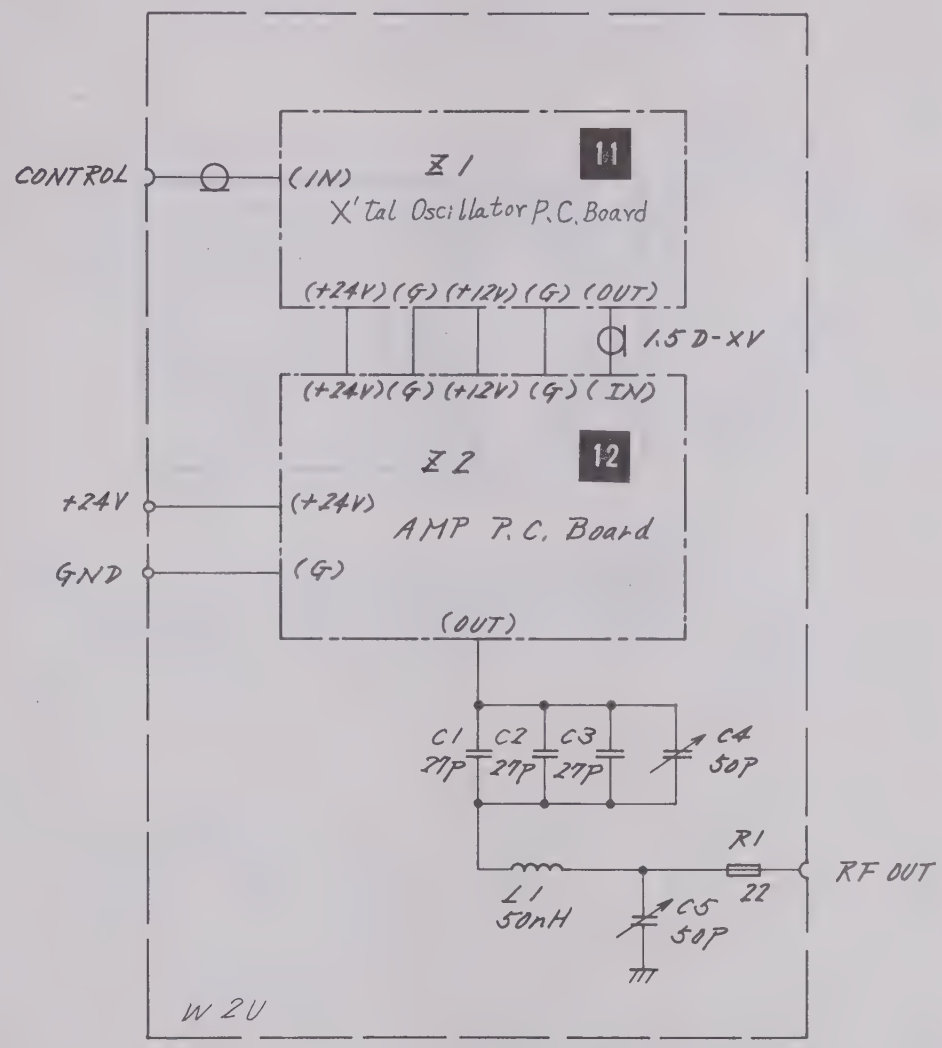

Component List: W4W3147

QTY	ITEM	PART NO.	DESCRIPTION	MATERIAL	FINISH

CHECKED BY | TRACED BY | SCALE

APPROVED BY | DRAWN BY

DEP

ANRITSU ELECTRIC
TOKYO JAPAN

10

TITLE
CIRCUIT DIAGRAM OF Z8 AO DRIVER

DRAWING NO.
W4W3146 1/1

A4 1.000

3-69

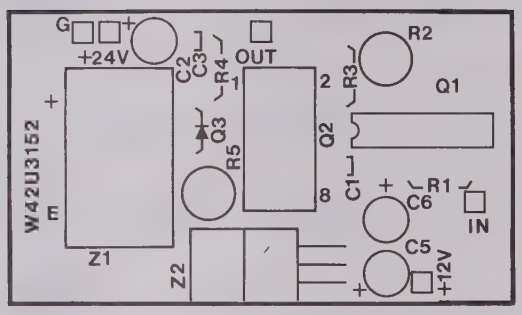

Component Layout of Z1 in Z8

W4W3150 1/1

APPLICATION

REVISIONS

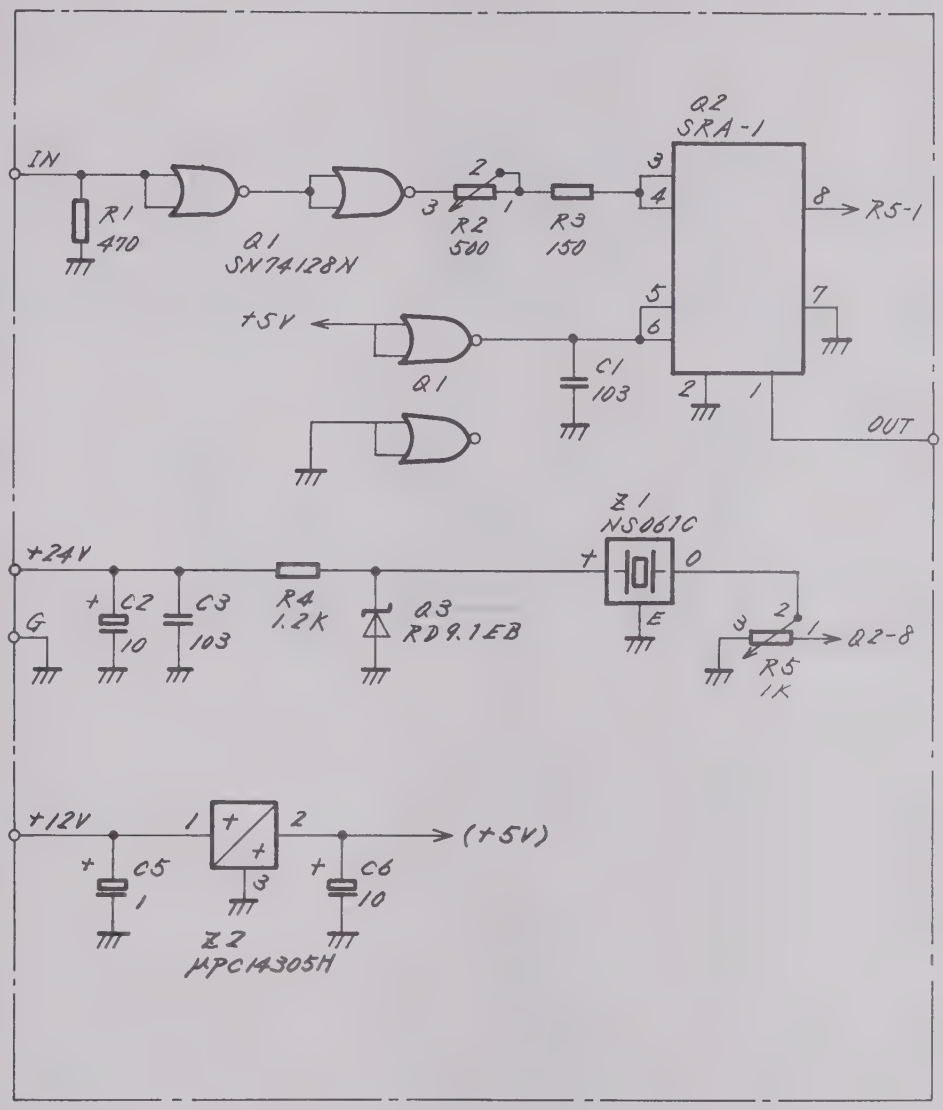

Component list : W4W3151

QTY	ITEM	PART NO.	DESCRIPTION	MATERIAL	FINISH

CHECKED BY | TRACED BY | SCALE | ANRITSU ELECTRIC TOKYO JAPAN | 11

APPROVED BY | DRAWN BY

DEP

TITLE: CIRCUIT DIAGRAM OF Z1 IN Z8 X'TAL OSCILLATOR

DRAWING NO. W4W3150 1/1

A4 1.000

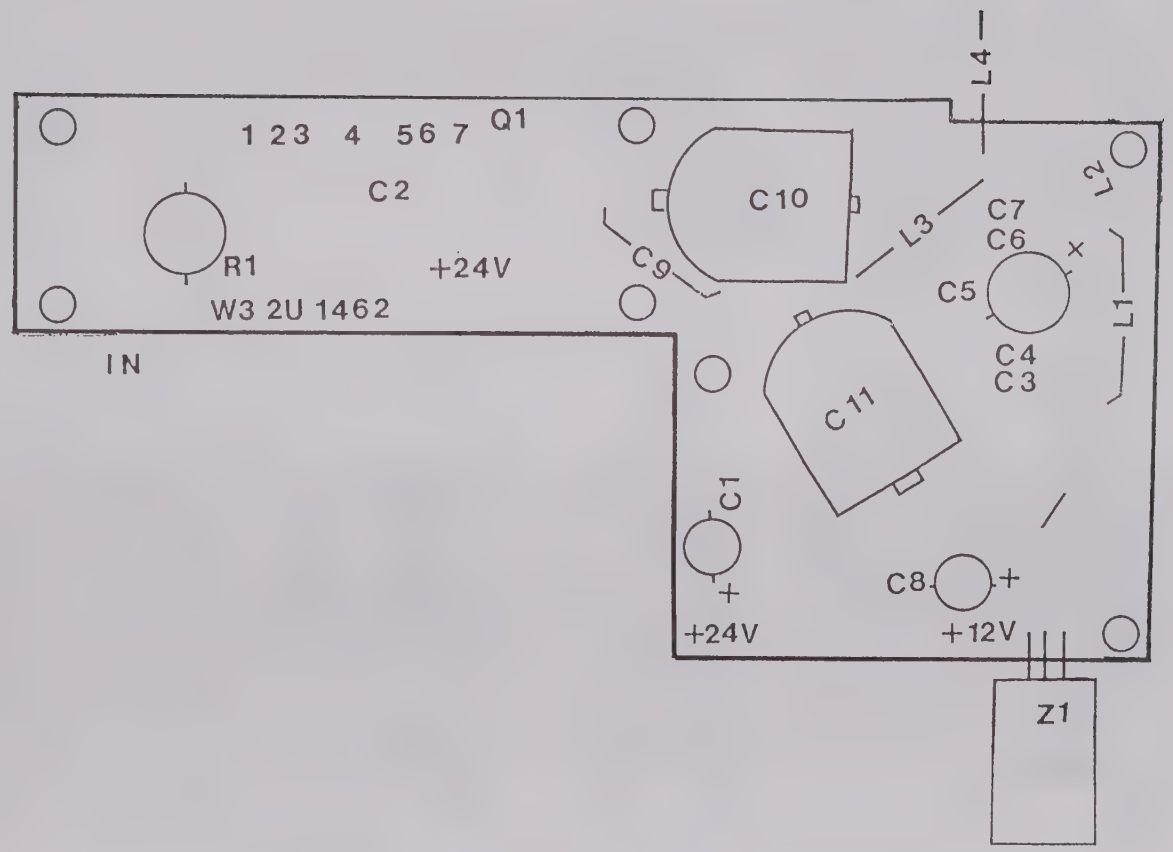

Component Layout of Z2 in Z8

W4 W 3154 1/1

APPLICATION

REVISIONS

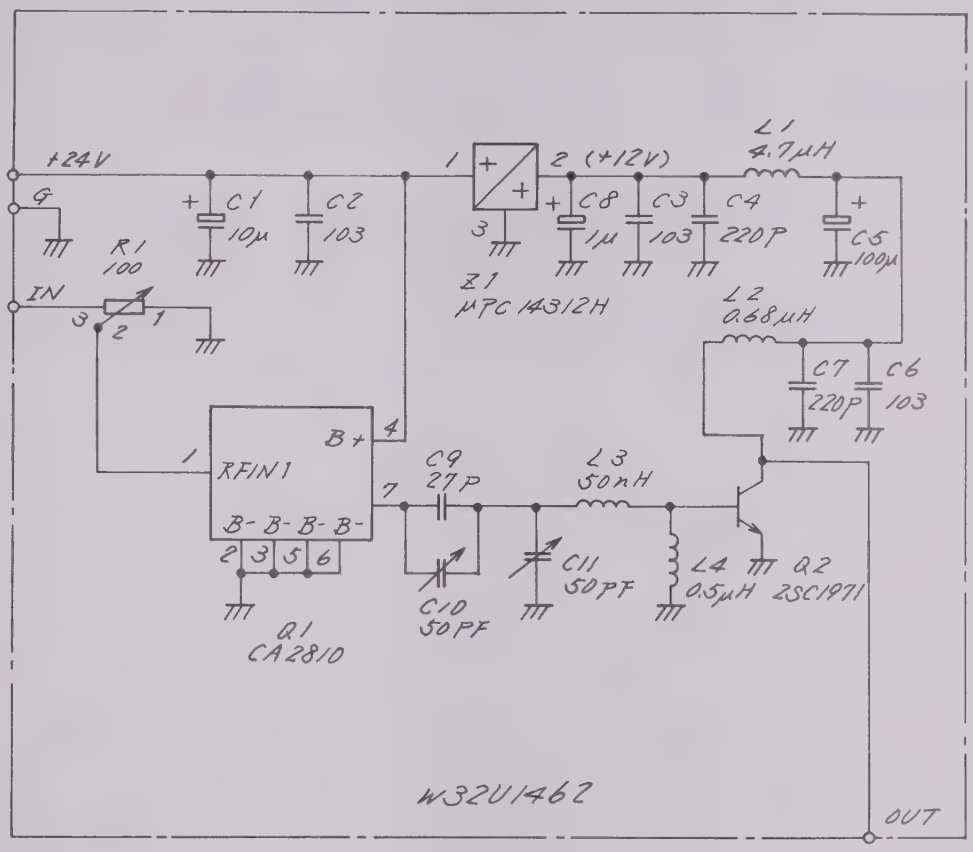

Component List : W4W 3155

QTY	ITEM	PART NO.	DESCRIPTION	MATERIAL	FINISH

CHECKED BY | TRACED BY | SCALE | ANRITSU ELECTRIC TOKYO JAPAN | 12

APPROVED BY | DRAWN BY

DEP

TITLE CIRCUIT DIAGRAM OF Z2 IN Z8 AMP PC BOARD

DRAWING NO. W4W 3154 1/1

A4 1.000

3-73

SECTION 4

ADJUSTMENT

Perform the adjustment and confirmation of the MH925A plug-in unit with it connected to the MW98A using the connection cable.

To adjust each unit of MH925A, proceed in accordance with the adjustment flow shown in paragraph 4.2.

The instruments required for adjustment are listed in Table 4-1.

4.1 Instruments Required for Adjustment

Table 4-1 Instruments Required for Adjustment

No.	Instrument Name	Required Specification	Remarks
1.	Digital Multimeter	Measuring voltage range: 0 to ±100V (DC)	
2.	Oscilloscope	Frequency range: DC to 200 MHz	
3.	Frequency Counter	Measuring frequency range: ≧100 MHz	Anritsu MF57A/MF63A
4.	Optical Attenuator	1.3 μm band Maximum attenuation 65 dB	Anritsu MN93B
5.	Stabilized Light Source	Wavelength 1.3 μm	Anritsu MG921A
6.	Optical Power Meter with Optical Sensor	Wavelength range: 0.75 to 1.8 μm Measuring range: -40 to +10 dBm	Anritsu ML93A and MA98A
7.	Waveform Monitor	Wavelength 1.0 to 1.6 μm	Anritsu MP96A
8.	Optical Fiber Cable	Single mode fiber cable length: ≧16 km	
9.	AT-3	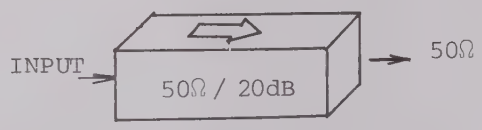	
10.	50Ω Terminator AT-4	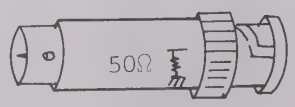	

Table 4-1 Instruments Required for Adjustment (Cont'd)

No.	Instrument Name	Required Specification	Remarks
11.	AT-5	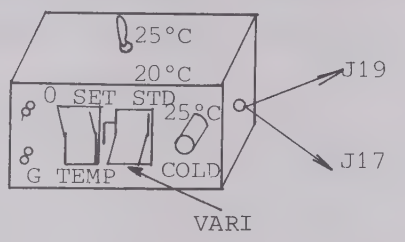	
12.	Extender board AT-6	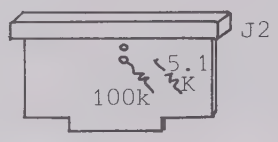	
13.	150Ω Terminator AT-7	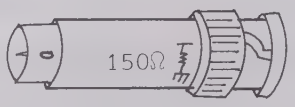	

4.2 Adjustment Flow

(1)	Z7 POWER SUPPLY	Paragraph 4.3.1
(2)	Z8 AO DRIVER	Paragraph 4.3.2
(3)	Z4 THERMO CONTROLLER	Paragraph 4.3.3
(4)	Z2 LD/AO CONTROL	Paragraph 4.3.4
(5)	Z3 APD BIAS	Paragraph 4.3.5
(6)	Z6 AMP	Paragraph 4.3.6
(7)	Z3 APD BIAS	Paragraph 4.3.7
(8)	Z2 LD/AO CONTROL	Paragraph 4.3.8
(9)	Overall Adjustment	Paragraph 4.3.9
(10)	Mounting MH925A to MW98A	
(11)	Final inspection of MW98A + MH925A	

Note: Items (4) and (5) are preadjustment for items (8) and (7) respectively.

4.3 Adjustment of Each Circuit

4.3.1 Z7 POWER SUPPLY

(1) Purpose

To set the voltage of the Z7 unit.

(2) Instrument required

Digital multimeter

(3) Adjustment procedures

Step	Procedure
1.	Set the voltage between pin 9 and pin 20 (GND) of J1 to +24 V ±0.01 V using R5.
2.	Confirm that the voltage between TP2 (pin 1 of J2) and pin 2 (GND) of J2 is about +5 v.

4.3.2 Z8 AO DRIVER

(1) Purpose

1. To tune the driver signal of the tuning amplifier.
2. To adjust the output level of the driver signal.

(2) Instruments required

Oscilloscope (1)

Attenuator (AT-3)

50Ω terminator (AT-4)

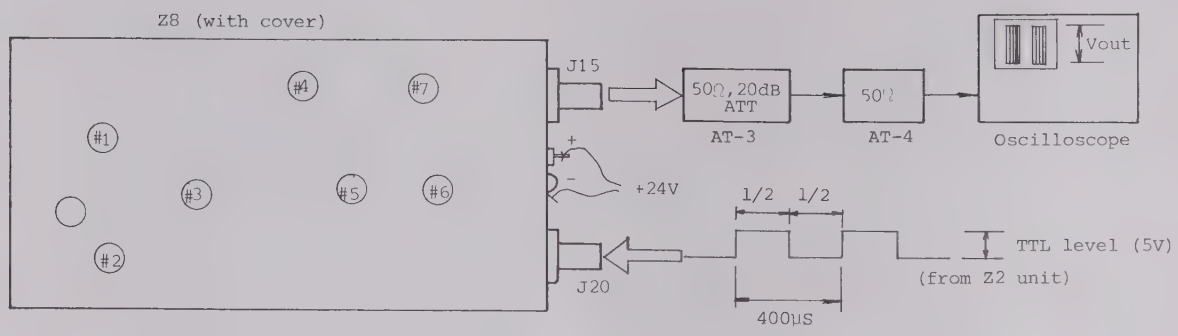

Fig. 4-1 Z8 AO DRIVER ADJUSTMENT

(3) Adjustment Procedures

Step	Procedure
1.	Turn VR #1 fully clockwise.
2.	Turn VR #3 to center and VR #2 fully counterclockwise.
3.	Adjust the variable capacitors #4 to #7 so that the Vout on oscilloscope becomes maximum, and check that the waveform is not distorted.
4.	Turn VR #2 fully counterclockwise and confirm that the output level is more than 12 Vo-p (24 Vp-p).
5.	Turn VR #1 and confirm that the output level changes smoothly. Then, set VR #1 fully clockwise.
6.	Adjust VR #2 so that the output level becomes same as the value which is indicated on the AO switch.
7.	Turn VR #1 fully counterclockwise, center, and fully clockwise, and confirm that the output waveform is not abnormal when turning the POWER switch ON and OFF.
8.	Repeat step 5.

Note: 1. When replacing the AO switch, perform steps 6 to 8.

2. When replacing the AO driver unit, don't connect J15 to the AO switch until steps 1 to 8 are completed.

4.3.3 Z4 THERMO CONTROLLER

(1) Purpose

To set the reference temperature of the thermo controller.

(2) Instruments required

Reference thermo controller (AT-5)

Digital multimeter

Oscilloscope

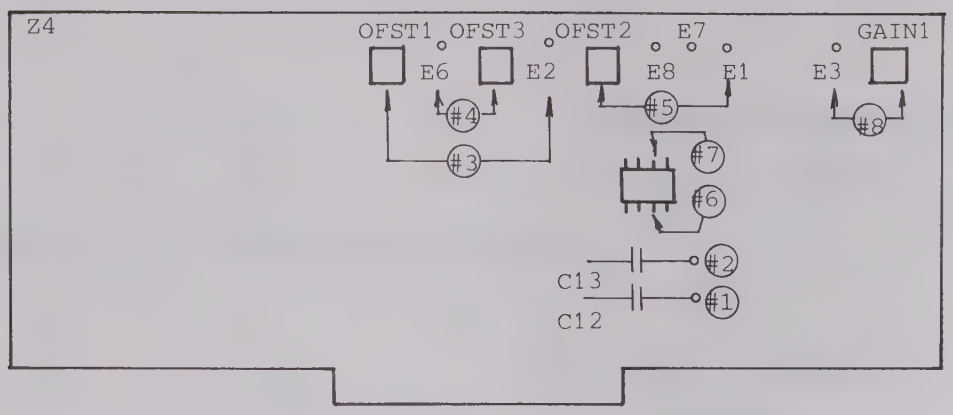

Fig. 4-2 THERMO CONTROLLER Adjustment

(3) Adjustment procedures

Step	Procedure
1.	Remove J16 and J18 from Z10 LD module.
2.	Connect AT-5 to J17 and J19.
3.	Check the voltages at #1 and #2 #1: +15.0 ±0.5 V, #2: -15.0 ±0.5 V
4.	Set AT-5 to "0 SET" and adjust OFST1 so that the voltage at E2 is within ±0.001 V.
5.	Set AT-5 to "TEMP", "STD" and "25°C".
6.	Check the voltage at #3 #3: approx. -341 mV
7.	Adjust OFST3 and set the voltage at #4 to (200 mV + measured value in setp 6.) Example: If the measured value in step 6 is -340 mV, set the voltage at #4 to -140 mV.
8.	Set the voltage at #5 to within ±0.005 V by OFST2.
9.	Check the voltates at #6 and #7 #6: +0.2 ±0.01 V #7: -0.2 ±0.01 V

Step	Procedure

10. Adjust GAIN1, so that the following waveform appears at E3.

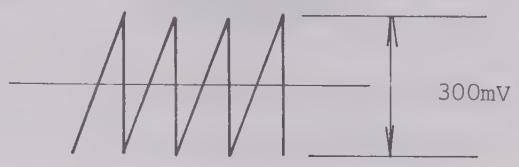

Waveform of E3

11. Observe the AT-5 terminal by Oscilloscope and set the AT-5 switches TEMP and VARI as follows.
Perform items (a) to (c)

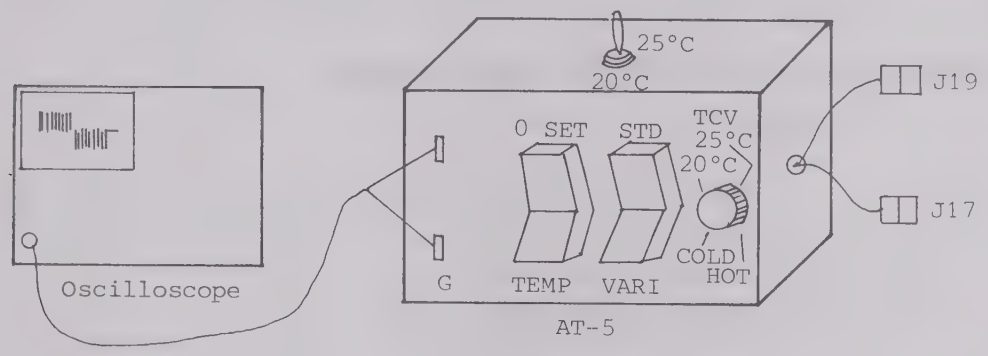

(a) Confirm that the following waveform appears on the oscilloscope when TCV is set to 25°C.

Step	Procedure
	(b) Confirm that the following waveform appears on the oscilloscope when TCV is set to COLD.

Waveform

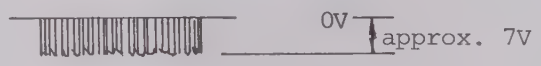

(c) Confirm that the following waveform appears on the oscilloscope when TCV is set to HOT.

Waveform

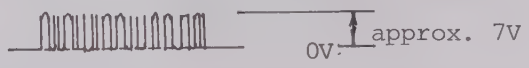

12. Confirm that the LASOR READY lamp on the MW98A lights up when TCV is set to 25°C

4.3.4 Z2 LD/AO CONTROL (Preadjustment)

(1) Purpose

To adjust the timing of the signal that drives LD and AO driver.

(2) Instrument required

Oscilloscope

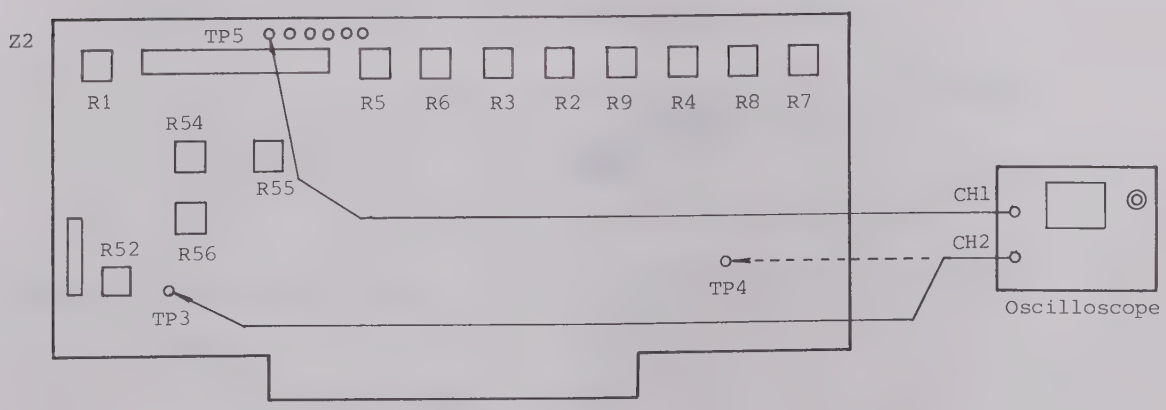

Fig. 4-3 LD/AO CONTROL Adjustment

(3) Adjustment procedures

Step	Procedure
1.	Observe the waveforms at TP3 and TP5.

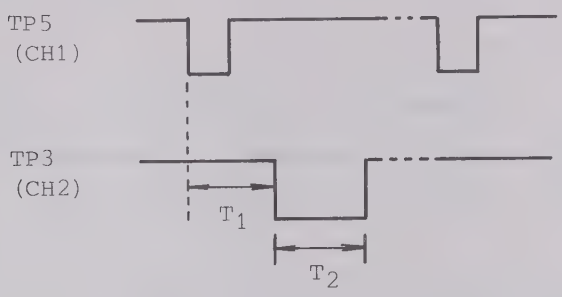

2. By adjusting R1, set T1 to 4.3 μs accurately.

3. Change the setting of PULSE WIDTH of MW98A to 100 ns, 500 ns and 2 μs respectively, and adjust T2 as follows:

PULSE WIDTH	T2	Adjust By
100 ns	100 ns (within ±5%)	R54
500 ns	500 ns (within ±5%)	R55
2 μs	2 μs (within ±5%)	R56

4. Remove the oscilloscope probe from TP3, and connect it to TP4.

5. Set the SHIFT switch of MW98A to MASK.

6. Set R2 to R5 fully counterlockwise.

Step	Procedure

7. Observe the waveforms at TP4 and TP5.

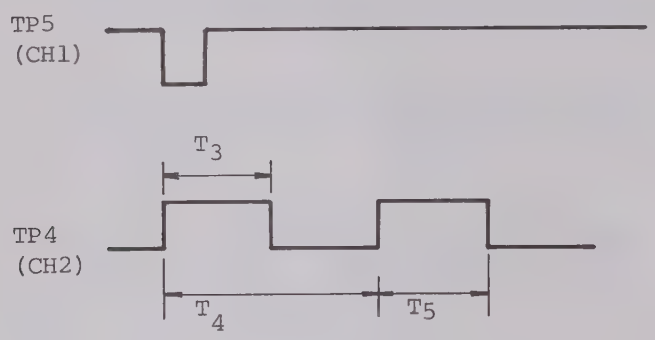

8. Confirm that T4 is approx. 1.6 μs.

9. Change the setting of PULSE WIDTH of MW98A to 100 ns, 500 ns, and 2 μs respectively, and adjust T5 as follows:

PULSE WIDTH	T5	Adjust By
100 ns	approx. 800 ns	R7
500 ns	approx. 1.2 μs	R8
2 μs	approx. 3 μs	R9

10. Set the MW98A as follows:

    DISTANCE RANGE: 72 km
    PULSE WIDTH: 100 ns
    Set T3 to 1.1 μs by adjusting R5

11. Set the masking point (↑ point) to the right end of the CRT.

(Cont'd.)

Step	Procedure
12.	Change the setting of PULSE WIDTH of MW98A to 100 ns, 500 ns and 2 μs respectively, adjust T3 as follows:

PULSE WIDTH	T3	Adjust By
100 ns	approx. 2.2 μs	R2
500 ns	approx. 2.6 μs	R3
2 μs	approx. 4 μs	R4

13. Turn R52 fully clockwise.

4.3.5 Z3 APD BIAS (Preadjustment)

(1) Purpose

To set the bias of the APD.

(2) Instruments required

Digital multimeter

Extender board (AT-6)

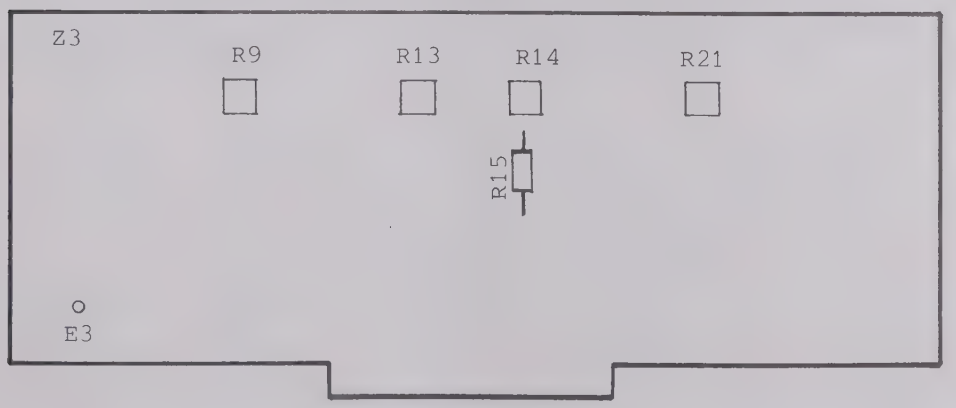

Fig. 4-4 APD BIAS Adjustment

(3) Adjustment procedures

Step	Procedure
1.	Remove the Z3 PC board and connect again using AT-6 Extender Board.
2.	Set R9 fully clockwise.
3.	Set R13 and R14 to center.
4.	Set the voltage between the both ends of R15 to 10 V ±0.1 V by R21.
5.	Connect the digital multimeter to A and B of AT-6. Set the current of the digital multimeter to 200 μA ±5 μA by R9.

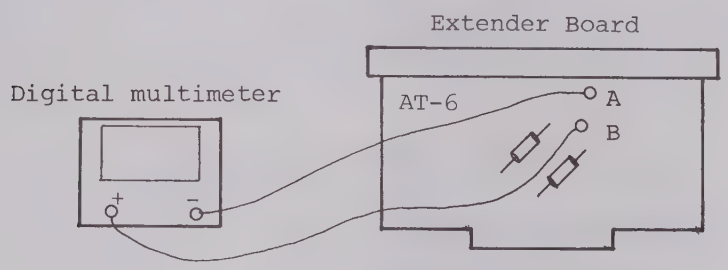

6.	Set R13 fully counterclockwise.
7.	Confirm that the voltage at E3 is approx. -20.7 V.

4.3.6 Z6 AMP

(1) Purpose

To set the offset bias of the amplifier.

(2) Instrument required

Oscilloscope
150 Ω terminator

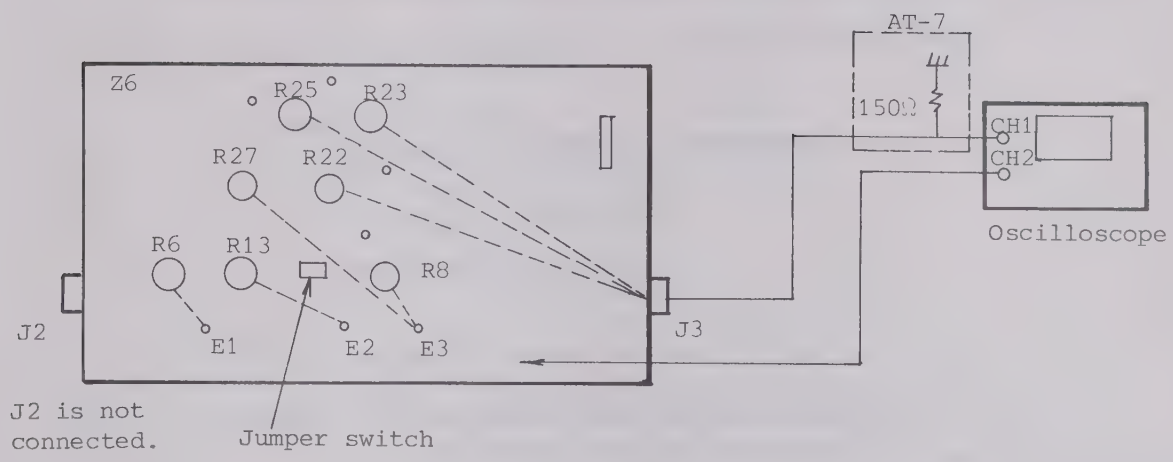

Fig. 4-5 AMP Adjustment

(3) Adjustment procedures

Step	Procedure
1.	Remove the jumper switch. (The connection between J4 and J5 is disconnected.)
2.	Set the voltages at E1, E2 and E3 as follows.

	Voltage	Adjust by
E1	0 V	R6
E2	0 V	R13
E3	0 V	R8

(Oscilloscope should be set at maximum sensitivity.)

(cont'd.)

Step	Procedure
3.	Connect the jumper switch again.
4.	Keeping the oscilloscope sensitivity to maximum, set the base line to a horizontal graticule line.
5.	Set the oscilloscope sensitivity to 50 mV/DIV.
6.	Set the voltage at E3 to approx. -1 V.

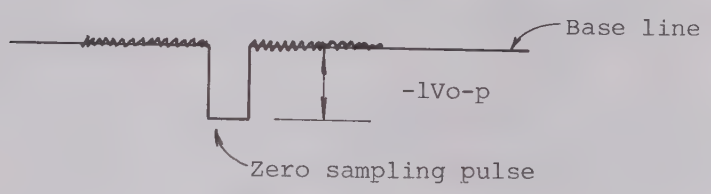

7.	Set the oscilloscope sensitivity to 2 mV/DIV.
8.	Set the base line to the horizontal graticule line which is set in step 4 by R27
9.	Set the oscilloscope sensitivity to 50 mV/DIV.
10.	Set the zero sampling pulse peak at the horizontal line by R6.

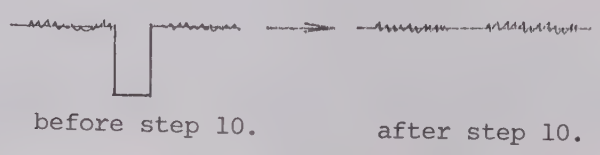

11.	Terminate the oscilloscope input (CH1) by 150Ω.
12.	Set the voltage of base line to 0 V by R22, R23, and R25.

4.3.7 Z3 APD BIAS

It is necessary to perform the preadjustment in paragraph 4.3.5 above before proceeding with this adjustment.

(1) Purpose

To set the bias to be applied to the APD module.

(2) Instrument required

Oscilloscope
Light source (Single Mode)

Optical attenuator

150Ω terminator (AT-7)

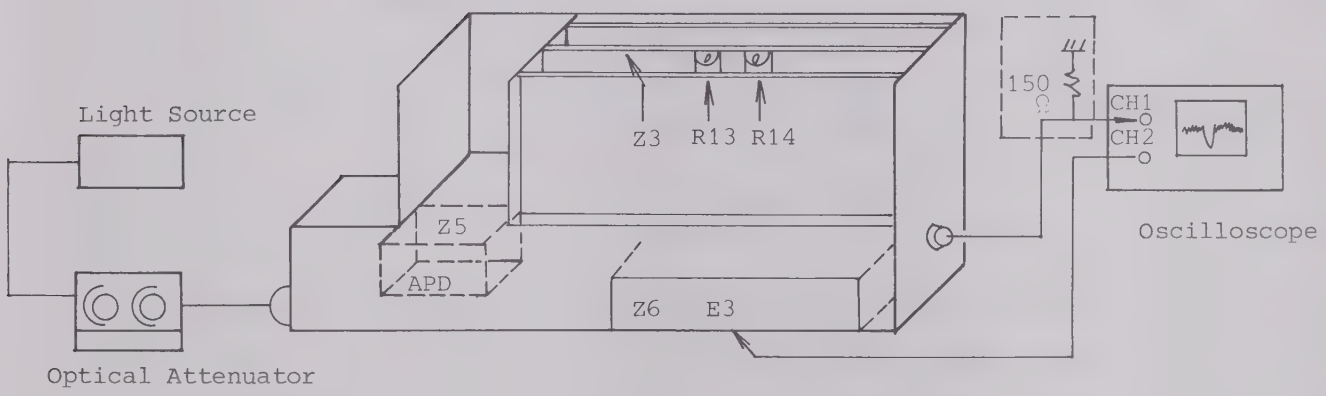

Fig. 4-6 APD BIAS Adjustment

(3) Adjustment procedures

Step	Procedure
1.	Set up the instrument as shown in Fig. 4-6.
2.	Set the pulse peak on the oscilloscope as follows by adjusting optical attenuator.

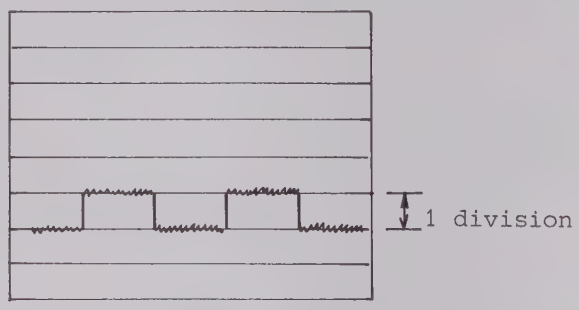

CH1

3.	Set the waveform of CH1 as follows by R13 (coarse adjustment) and R14 (fine adjustment.)

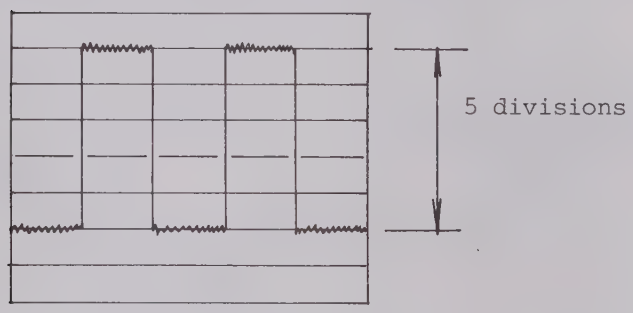

CH1

4.	Set the optical attenuator to 50 dB.
5.	Set the pulse peak to approx. +0.5 V by R3 inside the Z5 APD unit.

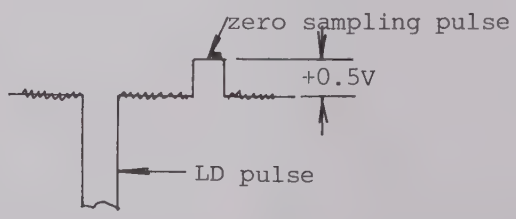

4.3.8 Z2 LD/AO CONTROL

It is necessary to perform the preadjustment in paragraph 4.3.4 above before proceeding with this adjustment.

(1) Purpose

To adjust the optical output level.

(2) Instruments required

Optical power meter (ML93A)

Optical sensor (MA98A)

Oscilloscope

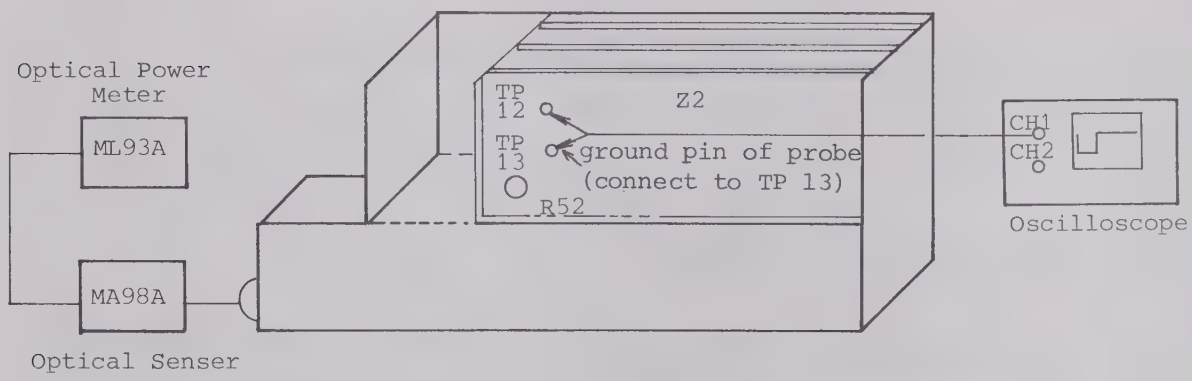

CAUTION

Don't touch the ground pin of the oscilloscope probe to the ground of the MH925A. If touch, LD will be broken.

Fig. 4-7 LD/AO CONTROL Adjustment

(3) Adjustment procedures

Step	Procedure
1.	Set PULSE WIDTH and DISTANCE RANGE of MW98A to 2 μs and 18 km.
2.	Observing the pulse waveform at TP12, set the pulse peak value to 500 mV ±5 mV by R52.

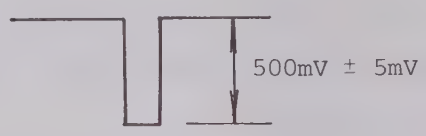

3.	Set the CAL FACTOR of ML93A to -20.00 dB.
4.	Confirm that the LD output level is more than +3 dBm.
5.	If not, increase the output level by adjusting R52. * However, upper limit of the pulse peak value in step 2 is 750 mV.
6.	Even if the pulse peak value is set at the maximum of 750 mV, the LD output level is not more than +3 dBm, perform the following steps (a) to (d).

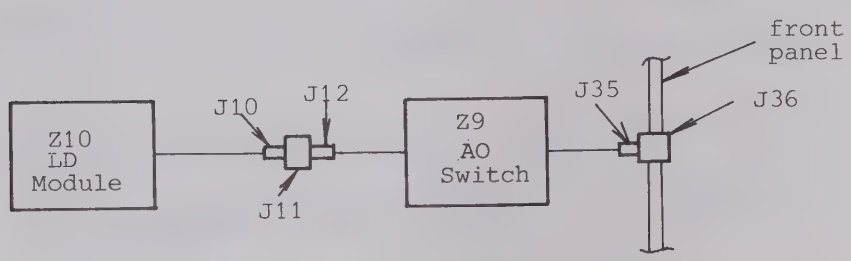

(Cont'd.)

Step	Procedure
	(a) Remove J10 from J11 Adaptor.
	(b) Check the output level from J10. If the output level is more than +8 dBm, Z10 LD module is normal.
	(c) Removing the connectors, clean up the connection points. After connecting again, check the J36 LD output level.
	(d) If the output level in step (c) is not more than +3 dBm, Z9 AO switch is faulty.

4.3.9 Overall Adjustment

(1) Purpose

1. To make the final adjustment of the LD/AO CONTROL unit (Z2).
2. To confirm the operation (insertion loss) of the AO switch.
3. To confirm the timing of the AO switch drive signal.

(2) Instruments required

Oscilloscope

Waveform monitor (MP96A)

Optical fiber cable (SM)

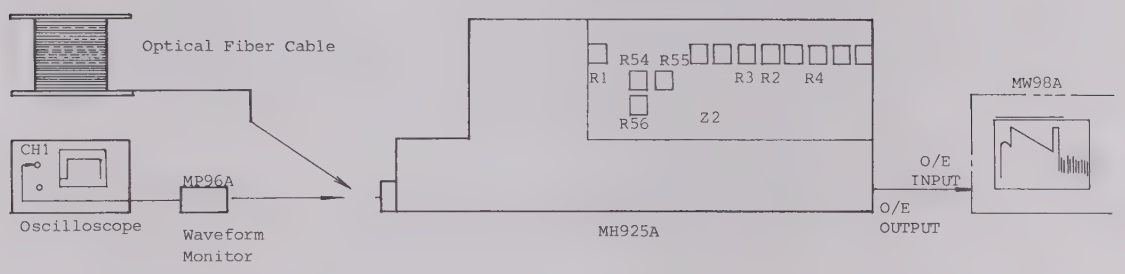

Fig. 4-8 Overall Adjustment

(3) Adjustment Procedures

Step	Procedure
1.	Connect MP96A and oscilloscope to MH925A as shown in Fig. 4-8.
2.	Set PULSE WIDTH of MW98A to 100 ns, 500 ns, and 2 μs, and check the pulse width on the oscilloscope.

PULSE WIDTH setting of MW98A	PULSE WIDTH on the oscilloscope
100 ns	100 ns ±5%
500 ns	500 ns ±5%
2 μs	2 μs ±5%

Step	Procedure
3.	If the result in step 2 is abnormal, readjust Z2 according to paragraph 4.3.4.
4.	Remove MP96A, and connect the optical fiber cable. * The length of the fiber cable should be known in advance.
5.	Measure the length of the fiber cable with MW98A and confirm that the measured value is the same as the actual length.
6.	If not, adjust R1 in Z2.
7.	Expand the bacscattering starting point on the MW98A CRT as follows.

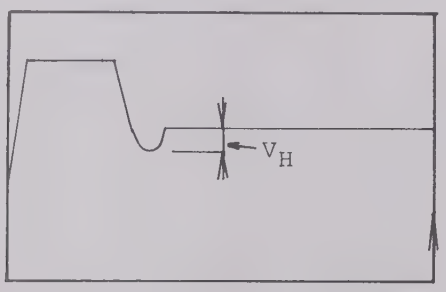

(Cont'd.)

Step	Procedure
8.	Set the SHIFT switch of MW98A to MASK and set the masking point (↑ point) to the right end of the CRT.

In each PULSE WIDTH setting of MW98A, adjust the R2, R3 and R4 so that the V_H (indicated in above figure) becomes approx. 2.5 dB on the CRT graticule.

PULSE WIDTH	V_H	Adjust By
100 ns	approx. 2.5 dB	R2
500 ns	approx. 2.5 dB	R3
2 μs	approx. 2.5 dB	R4

SECTION 5

REPLACEABLE PARTS

5.1 Introduction

This section contains information relative to ordering replacement components. The following table shows circuit references (hereinafter CKT REF) and abbreviations used for components given in the component list. In the component list, the quantity of each component is one so far as no quantitative description is given in the "NOTE" column.

(1) Circuit reference

AT : Attenuator	K : Relay	Q : Transistor, Diode, Rectifier, IC	T : Transformer
C : Capacitor	L : Coil	R : Resistor	U : Feedthrough filter
F : Fuse	M : Meter, timer	S : Switch	V : Neon lamp, Vacuumtube
J : Jack, plug, connector	P : Lamp		X : Crystal OSC
			Z : Unit

(2) Abbreviations

A	: amperes	J-FET	: junction FET	PNP	: positive-negative-positive
Att. R var	: attenuator variable using film resistive elements	k	: kilo (x 10^3)	p-p,pp	: peak to peak value
		LED	: light emitting diode	RFC	: RF choke
BL	: boundary layer	M	: mega (x 10^6)	R-lamp	: resistor lamp
Cer	: ceramic	m	: milli (x 10^{-3})	rms	: effective value (root means square)
CF	: carbon film	MF	: metallized film		
Comp	: composition	MOS-FET	: metal oxide semi-conductor FET	SBD	: shottky barrier diode
CRT	: cathode-ray tube	M paper	: metallized paper	SCR	: silicon controlled rectifier
Di	: diode	M plast	: metallized plastic film	Si	: silicon
DIL type	: dual-in line type	Multi	: multiplying	SRD	: step recovery diode
Elect	: electrolyte aluminum	N ch	: N channel	Tant	: tantalum
		non-lin	: non-linear taper	Tr	: transistor
F	: farad	Non-pol	: non-polarity	Trans	: transformer
FET	: field effect transistor	NPN	: negative-positive-negative	μ	: micro (x 10^{-6})
G	: ground	Ω	: ohms	V	: volt
Ge	: germanium	p	: pico (x10^{-12})	Var	: variable
H	: henry	Plast	: plastic film	WW	: wire wound
Hz	: hertz	PMTR	: potentiometer	XTAL	: crystal
IC	: integrated circuit				
IEC	: Applicable to IEC Safety Standard				

5.2 Method of Reading Capacitors/Resistors

5.2.1 Capacitor Identification

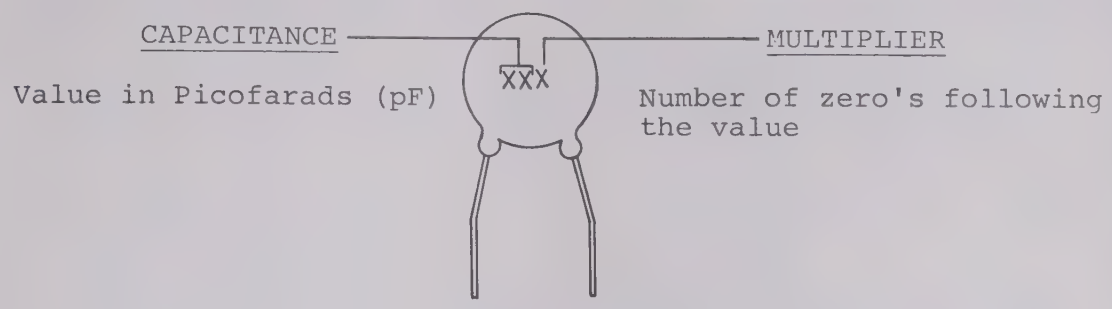

EXAMPLES:

103 = 10,000pF = 10^{-8}F or 0.01μF

302 = 3,000pF = 3×10^{-9}F or 0.003μF

676 = 67,000,000pF = 67×10^{-6}F or 67μF

(a) Ceramic capacitor, polyester capacitor

Indication	0.5	1	10	101	102	103	104
Capacity	0.5pF	1pF	10pF	100pF	1000pF	0.01μF	0.1μF

Example:

Ceramic Capacitor

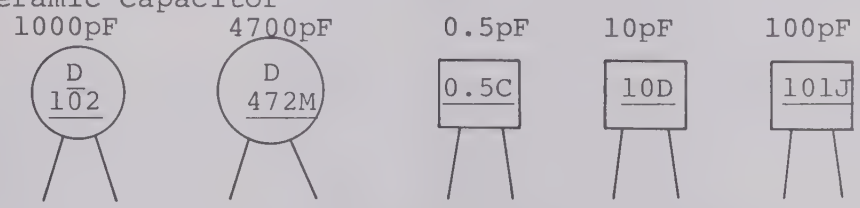

Capacity values are always underlined.

Polyester Capacitor

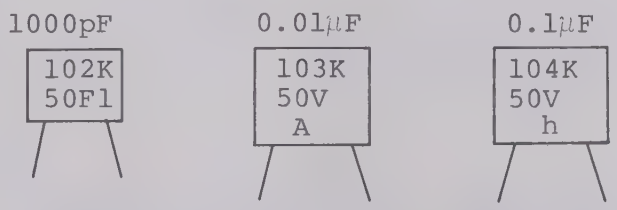

(b) Tantalum capacitor. Metallized capacitor and Electrolytic capacitor

Indication	OR47	010	100	101
Capacity	0.47μF	1μF	10μF	100μF

5.2.2 Resistor Identification

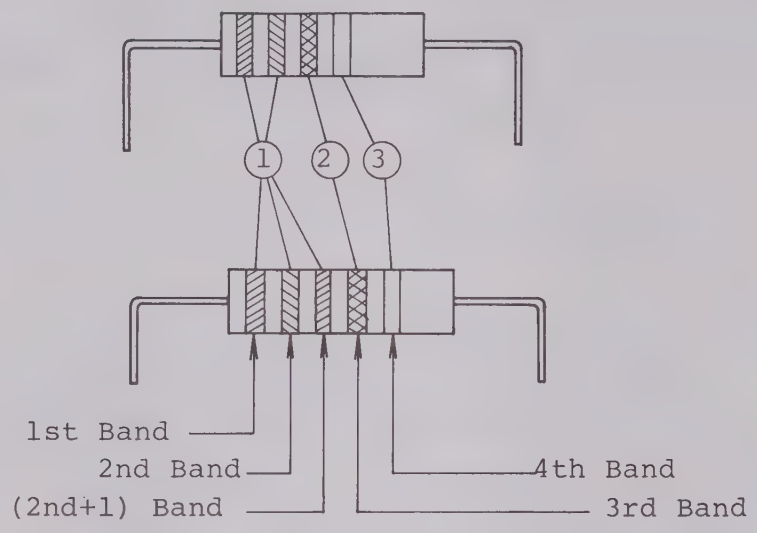

	①		②	③
COLOR	Figure		Multiplier	Tolerance
	1st	2nd	3rd	4th
Black	0	0	$x10^0$	-
Brown	1	1	$x10^1$	-
Red	2	2	$x10^2$	-
Orange	3	3	$x10^3$	-
Yellow	4	4	$x10^4$	-
Green	5	5	$x10^5$	$\pm$0.5%
Blue	6	6	$x10^6$	-
Purple	7	7	$x10^7$	-
Grey	8	8	$x10^8$	-
White	9	9	$x10^9$	-
Gold	-	-	$x10^{-1}$	$\pm$5%
Silver	-	-	$x10^{-2}$	$\pm$10%
-----	-	-		$\pm$20%

For Example:

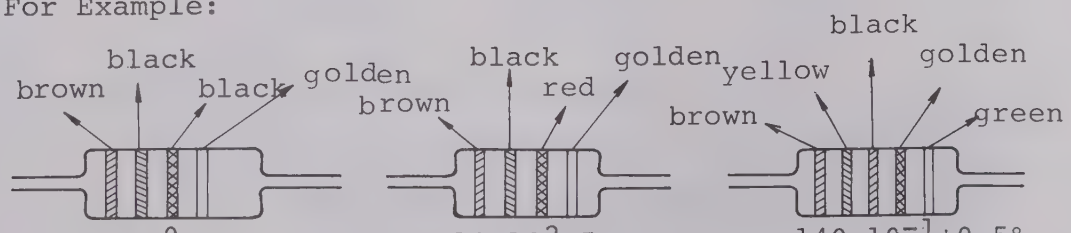

$10x10^0 \pm 5\%$ $10x10^2 \pm 5\%$ $140x10^{-1} \pm 0.5\%$

10Ω, ±5% 1kΩ, ±5% 14.0Ω, ±0.5%

5.3 Ordering Information

Upon ordering components, please give the following descriptions by referring to the C.L. (Component List).

	Item	Example
(1)	Name of instrument	PLUG-IN UNIT MH925A
(2)	Name of component	COMPONENT LIST OF Z2 LD/AO CONTROL
(3)	CKT REF	C16
(4)	Name of component	CK924F1H104Z Note: Part name is given in parentheses ( ) in the C.L. (Component List). Components with asterisks* are those that require factory adjustment upon repairing. When ordering a component or components with asterisk, give full description of the component.
(5)	Quantity	1
(6)	Serial No. of instrument	Serial No. M31257

5.4 Component List

COMPONENT LIST OF PLUG-IN UNIT MH925A

CKT REF	DESCRIPTION	RATING		NOTE
G 1	Fan,(109S005UL)			
J 1	Connector,(57-10360)			
J 2	Connector,(U-SA1003)			
J 3	Connector,(U-SB1503)			
J 4	Connector,(U-SB1503)			
J 5	Connector,(3CA-P2)			
J 6	Connector,(U-SB2203)			
J 7	Connector,(U-SA1003)			
J 8	Connector, (27DP-LP-1.5)			
J 9	Connector,(NM54-2)			
J10	Fiber plug,(FC)			
J11	Adapter,(SFCA)			
J12	Fiber plug,(FC)			
J13	Fiber plug,(FC)			
J14	Connector,(3CA-P2)			
J15	Connector,(3CA-P2)			
J16	Connector,(1625-3P-1)			
J17	Connector,(1625-3R-1)			
J18	Connector,(1625-3P-1)			
J19	Connector,(1625-3R-1)			
J20	Connector,(3CA-P2)			
J21	Connector, (DF1-10S-2.5R24)			
J22	Connector, (DF1-2S-2.5R24)			
J23	Connector,(1625-3P-1)			
J24	Connector,(1625-3R-1)			
J25	Connector,(1625-4P-1)			
J26	Connector,(1625-4R-1)			
J27	Not assigned			
J28	Not assigned			
J29	Connector, (DF1-10S-2.5R24)			
J30	Connector,(NM11-2F)			
J31	Connector,(NM11-2F)			
J32	Connector,(MP2.5CLP)			
J33	Connector,(MP2.5CP)			
J34	Connector, (MP2.5CPA-JJ)			
J35	Fiber plug,(FC)			

( ): Manufacturer's part number

* : Selected at factory

COMPONENT LIST OF PLUG-IN UNIT MH925A

CKT REF	DESCRIPTION	RATING		NOTE
J36	Adapter,(SFCA)			
Q 1	Tr,(2SD165)			
T 1	Trans,(W4T4855)			
Z 1	MOTHERBOARD			W3W1898
Z 2	LD/AO CONTROL			W3W1886
Z 3	APD BIAS			W3W1868
Z 4	THERMO CONTROLLER			W3W1856
Z 5	APD MODULE			W4W1738
Z 6	AMP			W3W1855
Z 7	POWER SUPPLY			W4W4205
Z 8	A/O DRIVER			W4W3146
Z 9	A/O SWITCH			
Z10	LD MODULE			

( ): Manufacturer's part number

* : Selected at factory

COMPONENT LIST OF Z1 MOTHERBOARD

CKT REF	DESCRIPTION	RATING		NOTE
F 1	Fuse,(MF51NN250V2A AC05)	2A		
J 1	Connector, (252-22-50-169M)			
J 2	Connector, (252-22-50-169M)			
J 3	Connector, (252-22-50-169M)			
J 4	Connector,(U-PA1019)			
J 5	Connector,(U-PB1519)			
J 6	Connector,(U-PB1519)			
J 7	Connector,(3C-R)			
M 1	Timer,(TM-0)	5000H		
R 1	MF,(RN14K2E9091D)	9.09kΩ,±0.5%,1/4W		
R 2	CF,(ARD25T105J)	1MΩ,±5%,1/4W		
R 3	MF,(RN14K2E1001D)	1kΩ,±0.5%,1/4W		

( ): Manufacturer's part number

* : Selected at factory

COMPONENT LIST OF Z2 LD/AO CONTROL

CKT REF	DESCRIPTION	RATING		NOTE
C 1	Cer,(RPE111CH101G50)	100pF,±2%,50V		
C 2	Cer,(CC45CH1H220JY)	22pF,±5%,50V		
C 3	Cer,(CC45CH1H470JY)	47pF,±5%,50V		
C 4	Cer,(RPE111CH201G50)	200pF,±2%,50V		
C 5	Cer,(RPE111CH471G50)	470pF,±2%,50V		
C 6	Cer,(RPE111CH471G50)	470pF,±2%,50V		
C 7	Cer,(RPE111CH471G50)	470pF,±2%,50V		
C 8	Cer,(RPE111CH101G50)	100pF,±2%,50V		
C 9	Cer,(CC45CH1H220JY)	22pF,±5%,50V		
C10	Cer,(CC45CH1H * *Y)	4 to 47pF,±0.25pF to ±5%,50V		Q'ty 0 or 1, *
C11	Cer,(RPE111CH331G50)	330pF,±2%,50V		
C12	Cer,(RPE111CH331G50)	330pF,±2%,50V		
C13	Cer,(RPE111CH391G50)	390pF,±2%,50V		
C14	Cer,(RPE111CH201G50)	200pF,±2%,50V		
C15	Cer,(CK924F1H104Z)	0.1μF,+80/-20%,50V		
C16	Cer,(CK924F1H104Z)	0.1μF,+80/-20%,50V		
C17	Cer,(CK924F1H104Z)	0.1μF,+80/-20%,50V		
C18	Cer,(CC45CH1H150JY)	15pF,±5%,50V		
C19	Cer,(CC45CH1H150JY)	15pF,±5%,50V		
C20	Cer,(CC45CH1H150JY)	15pF,±5%,50V		
C21	Cer,(CK924F1H104Z)	0.1μF,+80/-20%,50V		
C22	Cer,(CK924F1H104Z)	0.1μF,+80/-20%,50V		
C23	Cer,(CK924F1H104Z)	0.1μF,+80/-20%,50V		
C24	Elect,(CE02C1A220)	22μF,±20%,10V		
C25	Elect,(CE02C1A220)	22μF,±20%,10V		
C26	Elect,(CE02C1A220)	22μF,±20%,10V		
C27	Elect,(CE02C1A101)	100μF,±20%,10V		
C28	Elect,(CE02C1A220)	22μF,±20%,10V		
C29	Elect,(CE02C1A220)	22μF,±20%,10V		
C30	Elect,(CE02C1A220)	22μF,±20%,10V		
C31	Elect,(CE02C1A220)	22μF,±20%,10V		
C32 to C51	Cer,(CK924F1H104Z)	0.1μF,+80/-20%,50V		
J 1	Connector, (27DP-R-PC1)			
J 2	Connector,(U-PA1021)			
J 3	Connector,(U-PB2221)			
J 4	Pattern			

( ): Manufacturer's part number

* : Selected at factory

COMPONENT LIST OF Z2 LD/AO CONTROL

CKT REF	DESCRIPTION	RATING		NOTE
L 1	Microinductor, (LF8-101K)	100μH		
L 2	Microinductor, (SFT8-50S)	72μH		
L 3	Microinductor, (LF8-101K)	100μH		
L 4	Microinductor, (LF8-101K)	100μH		
Q 1	IC,(74LS244)			
Q 2	IC,(74LS138)			
Q 3	IC,(7404)			
Q 4	IC,(7410)			
Q 5	IC,(7430)			
Q 6	IC,(74LS221)			
Q 7	IC,(74LS221)			
Q 8	IC,(74LS221)			
Q 9	IC,(74LS221)			
Q10	IC,(74LS221)			
Q11	IC,(74LS221)			
Q12	IC,(74LS221)			
Q13	IC,(74LS74A)			
Q14	IC,(PS2007B)			
Q15	IC,(PS2007B)			
Q16	IC,(PS2007B)			
Q17	IC,(7404)			
Q18	IC,(7406)			
Q19	IC,(7406)			
Q20	Not assigned			
Q21	Not assigned			
Q22	IC,(74LS04)			
Q23	IC,(74LS00)			
R 1	Var,MF,(RJ-6S 50kΩ)	50kΩ,1/2W		
R 2	Var,MF,(RJ-6S 20kΩ)	20kΩ,1/2W		
R 3	Var,MF,(RJ-6S 20kΩ)	20kΩ,1/2W		
R 4	Var,MF,(RJ-6S 20kΩ)	20kΩ,1/2W		
R 5	Var,MF,(RJ-6S 100kΩ)	100kΩ,1/2W		
R 6	Var,MF,(RJ-6S 100kΩ)	100kΩ,1/2W		
R 7	Var,MF,(RJ-6S 5kΩ)	5kΩ,1/2W		
R 8	Var,MF,(RJ-6S 5kΩ)	5kΩ,1/2W		
R 9	Var,MF,(RJ-6S 10kΩ)	10kΩ,1/2W		
R10	MF,(RN14K2E2002D)	20kΩ,±0.5%,1/4W		

( ): Manufacturer's part number

* : Selected at factory

COMPONENT LIST OF Z2 LD/AO CONTROL

CKT REF	DESCRIPTION	RATING		NOTE
R11	MF,(RN14K2E1431D)	1.43kΩ,±0.5%,1/4W		
R12	MF,(RN14K2E2101D)	2.1kΩ,±0.5%,1/4W		
R13	MF,(RN14K2E3321D)	3.32kΩ,±0.5%,1/4W		
R14	MF,(RN14K2E2491D)	2.49kΩ,±0.5%,1/4W		
R15	MF,(RN14K2E2491D)	2.49kΩ,±0.5%,1/4W		
R16	MF,(RN14K2E4991D)	4.99kΩ,±0.5%,1/4W		
R17	MF,(RN14K2E5231D)	5.23kΩ,±0.5%,1/4W		
R18	MF,(RN14K2E5231D)	5.23kΩ,±0.5%,1/4W		
R19	MF,(RN14K2E1431D)	1.43kΩ,±0.5%,1/4W		
R20	MF,(RN14K2E1431D)	1.43kΩ,±0.5%,1/4W		
R21	MF,(RN14K2E4991D)	4.99kΩ,±0.5%,1/4W		
R22	MF,(RN14K2E1431D)	1.43kΩ,±0.5%,1/4W		
R23	MF,(RN14K2E7501D)	7.5kΩ,±0.5%,1/4W		
R24	CF,(ARD25T391J)	390Ω,±5%,1/4W		
R25	CF,(ARD25T391J)	390Ω,±5%,1/4W		
R26	CF,(ARD25T391J)	390Ω,±5%,1/4W		
R27	CF,(ARD25T391J)	390Ω,±5%,1/4W		
R28	CF,(ARD25T391J)	390Ω,±5%,1/4W		
R29	CF,(ARD25T391J)	390Ω,±5%,1/4W		
R30	MF,(RN14K2E51R1D)	51.1Ω,±0.5%,1/4W		
R31	MF,(RN14K2E51R1D)	51.1Ω,±0.5%,1/4W		
R32	MF,(RN14K2E51R1D)	51.1Ω,±0.5%,1/4W		
R33	MF,(RN14K2E51R1D)	51.1Ω,±0.5%,1/4W		
R34	MF,(RN14K2E51R1D)	51.1Ω,±0.5%,1/4W		
R35	MF,(RN14K2E51R1D)	51.1Ω,±0.5%,1/4W		
R36	MF,(RN14K2E51R1D)	51.1Ω,±0.5%,1/4W		
R37	MF,(RN14K2E51R1D)	51.1Ω,±0.5%,1/4W		
R38	MF,(RN14K2E51R1D)	51.1Ω,±0.5%,1/4W		
R39	MF,(RN14K2E51R1D)	51.1Ω,±0.5%,1/4W		
R40	Not assigned			
R41	Not assigned			
R42	Not assigned			
R43	Not assigned			
R44	Not assigned			
R45	Not assigned			
R46	Not assigned			
R47	Not assigned			
R48	Not assigned			
R49	Not assigned			
R50	MF,(RN14K2E3922D)	39.2kΩ,±0.5%,1/4W		
R51	MF,(RN14K2E2740D)	274Ω,±0.5%,1/4W		
R52	Var,MF,(RJ-6P 100Ω)	100Ω,1/2W		
R53	CF,(ARD25T472J)	4.7kΩ,±5%,1/4W		
R54	Var,MF,(RJ-6P 5kΩ)	5kΩ,1/2W		
R55	Var,MF,(RJ-6P 20kΩ)	20kΩ,1/2W		
R56	Var,MF,(RJ-6P 20kΩ)	20kΩ,1/2W		

( ): Manufacturer's part number

* : Selected at factory

COMPONENT LIST OF Z3 APD BIAS

CKT REF	DESCRIPTION	RATING		NOTE
C 1	Elect,(CE02W1J101)	100μF,±20%,63V		
C 2	Elect,(CE04W1V100)	10μF,±20%,35V		
C 3	Elect,(CE04W1V100)	10μF,±20%,35V		
C 4	Elect,(CE04W1V100)	10μF,±20%,35V		
C 5	Elect,(CE04W1V100)	10μF,±20%,35V		
C 6	Elect,(CE02W1J101)	100μF,±20%,63V		
C 7	Elect,(CE04W1V100)	10μF,±20%,35V		
C 8	Elect,(CE04W1V100)	10μF,±20%,35V		
C 9	Cer,(RPE113F105Z50)	1μF,+80/-20%,50V		
C10 to C20	Cer,(CK924F1H104Z)	0.1μF,+80/-20%,50V		
C21	Cer,(CK924C1H102M)	1000pF,±20%,50V		
C22	Cer,(CK924C1H102M)	1000pF,±20%,50V		
J 1	Connector,(PC.Board)	22 pins x 2		
L 1	Coil,(LF8-101K)	100μH		
L 2	Coil,(LF8-101K)	100μH		
Q 1	Rectifier,(RB-152-LFB)			
Q 2	Tr,(2SC505)			
Q 3	Di,(1S953)			
Q 4	Di,(1S953)			
Q 5	Di,breakdown,(RD19A)	17.0 to 21.0V,250mW		
Q 6	Di,breakdown,(RD19A)	17.0 to 21.0V,250mW		
Q 7	IC,(μPC251C)			
Q 8	IC,(μPC251C)			
Q 9	Di,(1S953)			
Q10	Di,(1S953)			
Q11	Di,breakdown,(1SZ52)	5.9 to 6.5V,250mW		
R 1	CF,(ARD25T472J)	4.7kΩ,±5%,1/4W		
R 2	CF,(ARD25T472J)	4.7kΩ,±5%,1/4W		
R 3	CF,(ARD25T104J)	100kΩ,±5%,1/4W		
R 4	CF,(ARD25T473J)	47kΩ,±5%,1/4W		
R 5	CF,(ARD25T103J)	10kΩ,±5%,1/4W		
R 6	CF,(ARD25T103J)	10kΩ,±5%,1/4W		
R 7	CF,(ARD25T102J)	1kΩ,±5%,1/4W		
R 8	CF,(ARD25T224J)	220kΩ,±5%,1/4W		

( ): Manufacturer's part number

* : Selected at factory

COMPONENT LIST OF Z3 APD BIAS

CKT REF	DESCRIPTION	RATING		NOTE
R 9	Var,MF,(RJ-6S 500Ω)	500Ω,1/2W		
R10	CF,(ARD25T102J)	1kΩ,±5%,1/4W		
R11	CF,(ARD25T102J)	1kΩ,±5%,1/4W		
R12	MF,(RN14K2E3012D)	30.1kΩ,±0.5%,1/4W		
R13	Var,MF,(RJ-6S 20kΩ)	20kΩ,1/2W		
R14	Var,MF,(RJ-6S 2kΩ)	2kΩ,1/2W		
R15	MF,(RN14K2E1502D)	15kΩ,±0.5%,1/4W		
R16	MF,(RN14K2E1002D)	10kΩ,±0.5%,1/4W		
R17	MF,(RN14K2E1002D)	10kΩ,±0.5%,1/4W		
R18	MF,(RN14K2E4422D)	44.2kΩ,±0.5%,1/4W		
R19	MF,(RN14K2E4021D)	4.02kΩ,±0.5%,1/4W		
R20	MF,(RN14K2E7500D)	750Ω,±0.5%,1/4W		
R21	Var,MF,(RJ-6S 50kΩ)	50kΩ,1/2W		

( ): Manufacturer's part number

* : Selected at factory

COMPONENT LIST OF Z4 THERMO CONTROLLER

CKT REF	DESCRIPTION	RATING		NOTE
C 1	Tant,(CS02H1V6R8M)	6.8μF,±20%,35V		
C 2	Tant,(CS02H1V6R8M)	6.8μF,±20%,35V		
C 3	Cer,(CK924C1H104M)	0.1μF,±20%,50V		
C 4	Cer,(CK924C1H104M)	0.1μF,±20%,50V		
C 5	Elect,(CE02W1E101)	100μF,±20%,25V		
C 6	Cer,(CK924C1H103M)	0.01μF,±20%,50V		
C 7	Tant,(CS02H1C680M)	68μF,±20%,16V		
C 8	Tant,(CS02H1C680M)	68μF,±20%,16V		
C 9	Tant,(CS02H1V010M)	1μF,±20%,35V		
C10	Elect,(CE02W1V221)	220μF,±20%,35V		
C11	Elect,(CE02W1V221)	220μF,±20%,35V		
C12	Elect,(CE02W1E470)	47μF,±20%,25V		
C13	Elect,(CE02W1E470)	47μF,±20%,25V		
C14	Cer,(CK924C1H104M)	0.1μF,±20%,50V		
C15	Cer,(CK924C1H104M)	0.1μF,±20%,50V		
C16	Cer,(CK924C1H104M)	0.1μF,±20%,50V		
C17	Cer,(CK924C1H104M)	0.1μF,±20%,50V		
C18	Cer,(CK924C1H104M)	0.1μF,±20%,50V		
C19	Cer,(CK924C1H104M)	0.1μF,±20%,50V		
C20	Cer,(CK924C1H104M)	0.1μF,±20%,50V		
C21	Cer,(CK924C1H104M)	0.1μF,±20%,50V		
C22	Cer,(CK924C1H104M)	0.1μF,±20%,50V		
C23	Cer,(CK924C1H104M)	0.1μF,±20%,50V		
F 1	Fuse,(MF51NN250V2A AC05)	2A,250V		
J 1	Pattern			
Q 1	Thyristor,(10P2SG)			
Q 2	Thyristor,(10P2SG)			
Q 3	Thyristor,(10P2SG)			
Q 4	Thyristor,(10P2SG)			
Q 5	Rectifier,(RB-152-LFB)			
Q 6	Rectifier,(RB-152-LFB)			
Q 7	Di,(1S953)			
Q 8	Thyristor,(N13T1)			
Q 9	Thyristor,(N13T1)			
Q10	Di,breakdown,(RD13EB)	12.4 to 14.1V,400mW		

( ): Manufacturer's part number

* : Selected at factory

COMPONENT LIST OF Z4 THERMO CONTROLLER

CKT REF	DESCRIPTION	RATING		NOTE
Q11	Tr,(2SC1008A)			
Q12	Tr,(2SC1008A)			
Q13	Di,(1S953)			
Q14	Di,(1S953)			
Q15	Di,(1S953)			
Q16	Di,(1S953)			
Q17	Di,(1S953)			
Q18	Di,(1S953)			
Q19	Di,breakdown,(RD11EB)	10.4 to 11.6V,400mW		
Q20	IC,(μPC151C)			
Q21	IC,(μPC251C)			
Q22	IC,(μPC251C)			
Q23	IC,(μPC251C)			
Q24	IC,(μPC251C)			
Q25	Tr,(2SC943KL)			
Q26	Thyristor,(N13T1)			
Q27	IC,(μPC14315H)			
Q28	Di,(1S953)			
Q29	Di,(1S953)			
Q30	IC,(μPC16315H)			
Q31	Di,(1S953)			
Q32	Di,(1S953)			
Q33	Tr,(2SC943KL)			
Q34	Di,(1S953)			
Q35	Di,(1S953)			
Q36	Di,(1S953)			
R 1	MF,(RS1FB4.7kΩJ)	4.7kΩ,±5%,1W		
R 2	MF,(RS1FB4.7kΩJ)	4.7kΩ,±5%,1W		
R 3	CF,(ARD25T183J)	18kΩ,±5%,1/4W		
R 4	CF,(ARD25T393J)	39kΩ,±5%,1/4W		
R 5	CF,(ARD25T183J)	18kΩ,±5%,1/4W		
R 6	CF,(ARD25T333J)	33kΩ,±5%,1/4W		
R 7	CF,(ARD25T183J)	18kΩ,±5%,1/4W		
R 8	CF,(ARD25T393J)	39kΩ,±5%,1/4W		
R 9	CF,(ARD25T183J)	18kΩ,±5%,1/4W		
R10	CF,(ARD25T333J)	33kΩ,±5%,1/4W		
R11	CF,(ARD25T122J)	1.2kΩ,±5%,1/4W		
R12	CF,(ARD25T122J)	1.2kΩ,±5%,1/4W		
R13	CF,(ARD25T821J)	820Ω,±5%,1/4W		
R14	CF,(ARD25T821J)	820Ω,±5%,1/4W		
R15	CF,(ARD25T102J)	1kΩ,±5%,1/4W		
R16	CF,(ARD25T102J)	1kΩ,±5%,1/4W		

( ): Manufacturer's part number

* : Selected at factory

COMPONENT LIST OF Z4 THERMO CONTROLLER

CKT REF	DESCRIPTION	RATING		NOTE
R17	CF,(ARD25T220J)	22Ω,±5%,1/4W		
R18	CF,(ARD25T220J)	22Ω,±5%,1/4W		
R19	CF,(ARD25T102J)	1kΩ,±5%,1/4W		
R20	CF,(ARD25T102J)	1kΩ,±5%,1/4W		
R21	CF,(ARD25T220J)	22Ω,±5%,1/4W		
R22	CF,(ARD25T220J)	22Ω,±5%,1/4W		
R23	MF,(RN14K2E * D)	8.2k to 150kΩ,±0.5%, 1/4W		*
R24	MF,(RN14K2E1003D)	100kΩ,±0.5%,1/4W		
R25	MF,(RN14K2E1003D)	100kΩ,±0.5%,1/4W		
R26	MF,(RN14K2E1003D)	100kΩ,±0.5%,1/4W		
R27	MF,(RN14K2E * D)	12.1k to 150kΩ, ±0.5%,1/4W		*
R28	Var,MF,(RJ-6S 10kΩ)	10kΩ,1/2W		
R29	CF,(ARD25T473J)	47kΩ,±5%,1/4W		
R30	CF,(ARD25T473J)	47kΩ,±5%,1/4W		
R31	MF,(RN14K2E1330D)	133Ω,±0.5%,1/4W		
R32	CF,(ARD25T103J)	10kΩ,±5%,1/4W		
R33	CF,(ARD25T473J)	47kΩ,±5%,1/4W		
R34	CF,(ARD25T473J)	47kΩ,±5%,1/4W		
R35	CF,(ARD25T103J)	10kΩ,±5%,1/4W		
R36	CF,(ARD25T103J)	10kΩ,±5%,1/4W		
R37	MF,(RN14K2E1330D)	133Ω,±0.5%,1/4W		
R38	CF,(ARD25T103J)	10kΩ,±5%,1/4W		
R39	CF,(ARD25T153J)	15kΩ,±5%,1/4W		
R40	CF,(ARD25T122J)	1.2kΩ,±5%,1/4W		
R41	MF,(RN14K2E1003D)	100kΩ,±0.5%,1/4W		
R42	MF,(RN14K2E1002D)	10kΩ,±0.5%,1/4W		
R43	Var,MF,(RJ-6S 5kΩ)	5kΩ,1/2W		
R44	MF,(RN14K2E4872D)	48.7kΩ,±0.5%,1/4W		
R45	MF,(RN14K2E2491D)	2.49kΩ,±0.5%,1/4W		
R46	CF,(ARD25T223J)	22kΩ,±5%,1/4W		
R47	CF,(ARD25T103J)	10kΩ,±5%,1/4W		
R48	CF,(ARD25T123J)	12kΩ,±5%,1/4W		
R49	CF,(ARD25T333J)	33kΩ,±5%,1/4W		
R50	CF,(ARD25T183J)	18kΩ,±5%,1/4W		
R51	CF,(ARD25T103J)	10kΩ,±5%,1/4W		
R52	CF,(ARD25T183J)	18kΩ,±5%,1/4W		
R53	CF,(ARD25T123J)	12kΩ,±5%,1/4W		
R54	CF,(ARD25T333J)	33kΩ,±5%,1/4W		
R55	CF,(ARD25T223J)	22kΩ,±5%,1/4W		
R56	CF,(ARD25T224J)	220kΩ,±5%,1/4W		
R57	CF,(ARD25T474J)	470kΩ,±5%,1/4W		
R58	CF,(ARD25T333J)	33kΩ,±5%,1/4W		

( ): Manufacturer's part number

* : Selected at factory

COMPONENT LIST OF Z4 THERMO CONTROLLER

CKT REF	DESCRIPTION	RATING		NOTE
R59	Var,MF,(RJ-6S 50kΩ)	50kΩ,1/2W		
R60	CF,(ARD25T223J)	22kΩ,±5%,1/4W		
R61	CF,(ARD25T * J)	22k to 33kΩ,±5%, 1/4W		*
R62	Var,MF,(RJ-6S 2kΩ)	2kΩ,1/2W		
R63	CF,(ARD25T333J)	33kΩ,±5%,1/4W		
R64	CF,(ARD25T183J)	18kΩ,±5%,1/4W		
R65	MF,(RN14K2E1003D)	100kΩ,±0.5%,1/4W		
R66	WW,(ERF-2SK2R0)	2Ω,±10%,2W		Q'ty 0 or 1, *
R67	WW,(ERF-2SK2R0)	2Ω,±10%,2W		Q'ty 0 or 1, *
T 1	Trans,(SF2A)			
T 2	Trans,(SF2A)			

( ): Manufacturer's part number

* : Selected at factory

COMPONENT LIST OF Z5 APD MODULE

CKT REF	DESCRIPTION	RATING		NOTE
C 1	Not assigned			
C 2	Cer,(DF553F102PY50)	1000pF,+100/-0%,50V		
C 3	Cer,(DF553F102PY50)	1000pF,+100/-0%,50V		
C 4	Cer,(DF553F102PY50)	1000pF,+100/-0%,50V		
J 1	Receptacle,(HRM303)			
J 2	Receptacle,(OD9300)			
Q 1	Di,(FPD150M)			
R 1	Thermistor, (THE15-SSB0.85grade)			
Z 1	FILTER,(ZFN5203-00)			
Z 2	APD P.C. BOARD			W4W2288

( ): Manufacturer's part number

* : Selected at factory

COMPONENT LIST OF Z2 in Z5 APD

CKT REF	DESCRIPTION	RATING		NOTE
C 1	Elect,(CE04W1E221)	220μF,±20%,25V		
C 2	Elect,(CE04W1E221)	220μF,±20%,25V		
C 3	Elect,(CE04W1J470)	47μF,±20%,63V		
C 4	Cer,(CC924CK1H020C)	2pF,±0.25pF,50V		
C 5	Cer,(CC924CH1H100D)	10pF,±0.5pF,50V		
C 6	Cer,(CC924CH1H101J)	100pF,±5%,50V		
C 7	Cer,(CK924C1H103M)	0.01μF,±20%,50V		
C 8	Cer,(CK924C1H103M)	0.01μF,±20%,50V		
C 9	Cer,(RPE113F105Z50)	1μF,+80/-20%,50V		
C10	Cer,(RPE113F105Z50)	1μF,+80/-20%,50V		
C11	Cer,(RPE113F105Z50)	1μF,+80/-20%,50V		
C12	Cer,(CK924C1H103M)	0.01μF,±20%,50V		
L 1	Microinductor, (LH1-102K)	1mH		
L 2	Microinductor, (LH1-102K)	1mH		
L 3	Microinductor, (LH1-102K)	1mH		
Q 1	IC,(LH0032CG)			
R 1	MF,(RN14K2E1502D)	15kΩ,±0.5%,1/4W		
R 2	CF,(ARD25T620J)	62Ω,±5%,1/4W		
R 3	Var,MF,(RJ-6P 100kΩ)	100kΩ,1/2W		
R 4	CF,(ARD25T102J)	1kΩ,±5%,1/4W		

( ): Manufacturer's part number

* : Selected at factory

COMPONENT LIST OF Z6 AMP

CKT REF	DESCRIPTION	RATING		NOTE
C 1	Elect,(CE04W1E221)	220μF,±20%,25V		
C 2	Elect,(CE04W1E221)	220μF,±20%,25V		
C 3	Elect,(CE04W1E221)	220μF,±20%,25V		
C 4	Elect,(CE04W1E221)	220μF,±20%,25V		
C 5	Elect,(CE04W1E221)	220μF,±20%,25V		
C 6	Elect,(CE04W1E221)	220μF,±20%,25V		
C 7	Elect,(CE04W1A101)	100μF,±20%,10V		
C 8	Not assigned			
C 9	Cer,(RPE113F105Z50)	1μF,+80/-20%,50V		
C10	Cer,(RPE113F105Z50)	1μF,+80/-20%,50V		
C11	Cer,(RPE11eF105Z50)	1μF,+80/-20%,50V		
C12	Cer,(RPE113F105Z50)	1μF,+80/-20%,50V		
C13	Cer,(RPE113F105Z50)	1μF,+80/-20%,50V		
C14	Cer,(RPE113F105Z50)	1μF,+80/-20%,50V		
C15	Cer,(RPE113F105Z50)	1μF,+80/-20%,50V		
C16	Not assigned			
C17	Cer,(CC924CH1H470J)	47pF,±5%,50V		
C18	Cer,(CC924CH1H100D)	10pF,±0.5pF,50V		
C19	Cer,(CC924CH1H050D)	5pF,±0.5pF,50V		
C20	Cer,(CC924CH1H100D)	10pF,±0.5pF,50V		
C21	Cer,(CC924CH1H470J)	47pF,±5%,50V		
C22	Cer,(CC924CH1H100D)	10pF,±0.5pF,50V		
C23	Cer,(CC924CH1H101J)	100pF,±5%,50V		
C24	Cer,(CK924C1H102M)	1000pF,±20%,50V		
C25	Cer,(CK924F1H104Z)	0.1μF,+80/-20%,50V		
C26	Cer,(CC924CH1H470J)	47pF,±5%,50V		
C27	Not assigned			
C28	Not assigned			
C29	Not assigned			
C30	Not assigned			
C31	Not assigned			
C32	Not assigned			
C33	Not assigned			
C34	Not assigned			
C35	Cer,(CK924C1H103M)	0.01μF,±20%,50V		
C36	Cer,(CK924C1H103M)	0.01μF,±20%,50V		
C37	Cer,(CK924C1H103M)	0.01μF,±20%,50V		
C38	Cer,(CK924C1H103M)	0.01μF,±20%,50V		
C39	Cer,(CK924C1H103M)	0.01μF,±20%,50V		
C40	Cer,(CK924C1H103M)	0.01μF,±20%,50V		
C41	Cer,(CK924C1H103M)	0.01μF,±20%,50V		
C42	Cer,(CK924C1H103M)	0.01μF,±20%,50V		
C43	Elect,(CE04W1V100)	10μF,±20%,35V		
C44	Cer,(CK924C1H103M)	0.01μF,±20%,50V		
C45	Cer,(CK924C1H103M)	0.01μF,±20%,50V		

( ): Manufacturer's part number

* : Selected at factory

COMPONENT LIST OF Z6 AMP

CKT REF	DESCRIPTION	RATING		NOTE
C46	Elect,(CE04W1V100)	10μF,±20%,35V		
C47	Cer,(CK924C1H103M)	0.01μF,±20%,50V		
C48	Cer,(CK924C1H103M)	0.01μF,±20%,50V		
C49	Cer,(CK924C1H103M)	0.01μF,±20%,50V		
C50	Cer,(CK924C1H103M)	0.01μF,±20%,50V		
C51	Cer,(CK924C1H103M)	0.01μF,±20%,50V		
C52	Cer,(CK924C1H103M)	0.01μF,±20%,50V		
C53	Cer,(CK924C1H103M)	0.01μF,±20%,50V		
C54	Cer,(CK924C1H103M)	0.01μF,±20%,50V		
C55	Not assigned			
C56	Not assigned			
C57	Not assigned			
C58	Elect,(CW04W1E221)	220μF,±20%,25V		
C59	Elect,(CW04W1E221)	220μF,±20%,25V		
C60	Not assigned			
C61	Cer,(CC924CK1H020C)	2pF,±0.25pF,50V		
J 1	Connector,(DF1-10P-2.5DSA)			
J 2	Connector,(HRM-303B)			
J 3	Connector,(MP2.5CR-PC)			
J 4	Connector,(FFC-2AMEP)			
J 5	Connector,(FFC-2AMEP)			
L 1	Microinductor, (LH1-102K)	1mH		
L 2	Microinductor, (LH1-102K)	1mH		
L 3	Microinductor, (LH1-102K)	1mH		
L 4	Microinductor, (LH1-102K)	1mH		
Q 1	IC,(LH0032CG)			
Q 2	IC,(LH0032CG)			
Q 3	IC,(LH0032CG)			
Q 4	IC,(LH0002CH)			
Q 5	IC,(LF356N)			
Q 6	IC,(LF356N)			
Q 7	IC,(LF356N)			
Q 8	Not assigned			
Q 9	Not assigned			
Q10	Not assigned			

( ): Manufacturer's part number

* : Selected at factory

COMPONENT LIST OF Z6 AMP

CKT REF	DESCRIPTION	RATING		NOTE
Q11	Not assigned			
Q12	Not assigned			
Q13	IC,(HI1-201HS-5)			
Q14	IC,(HI1-201HS-5)			
Q15	IC,(μPC15305H)			
Q16	Not assigned			
Q17	Di,(1S953)			
Q18	Di,(1S953)			
Q19	Not assigned			
Q20	Not assigned			
Q21	IC,(HD74LS14)			
Q22	Di,(1SS99)			
R 1	Not assigned			
R 2	CF,(ARD25T102J)	1kΩ,±5%,1/4W		
R 3	MF,(RN14K2E1691D)	1.69kΩ,±0.5%,1/4W		
R 4	MF,(RN14K2E7501D)	7.5kΩ,±0.5%,1/4W		
R 5	CF,(ARD25T620J)	62Ω,±5%,1/4W		
R 6	Var,MF,(RJ-6P 100kΩ)	100kΩ,1/2W		
R 7	MF,(RN14K2E9310D)	931Ω,±0.5%,1/4W		
R 8	MF,(RN14K2E4991D)	4.99kΩ,±0.5%,1/4W		
R 9	CF,(ARD25T620J)	62Ω,±5%,1/4W		
R10	MF,(RN14K2E7150D)	715Ω,±0.5%,1/4W		
R11	MF,(RN14K2E7502D)	75kΩ,±0.5%,1/4W		
R12	CF,(ARD25T103J)	10kΩ,±5%,1/4W		
R13	Var,MF,(RJ-6P 10kΩ)	10kΩ,1/2W		
R14	CF,(ARD25T103J)	10kΩ,±5%,1/4W		
R15	MF,(RN14K2E1911D)	1.91kΩ,±0.5%,1/4W		
R16	MF,(RN14K2E7501D)	7.5kΩ,±0.5%,1/4W		
R17	CF,(ARD25T620J)	62Ω,±5%,1/4W		
R18	Var,MF,(RJ-6P 100kΩ)	100kΩ,1/2W		
R19	CF,(ARD25T103J)	10kΩ,±5%,1/4W		
R20	MF,(RN14K2E1430D)	143Ω,±0.5%,1/4W		
R21	CF,(ARD25T102J)	1kΩ,±5%,1/4W		
R22	Var,MF,(RJ-6P 50kΩ)	50kΩ,1/2W		
R23	Var,MF,(RJ-6P 50kΩ)	50kΩ,1/2W		
R24	MF,(RN14K2E3322D)	33.2kΩ,±0.5%,1/4W		
R25	Var,MF,(RJ-6P 50kΩ)	50kΩ,1/2W		
R26	CF,(ARD25T102J)	1kΩ,±5%,1/4W		
R27	Var,MF,(RJ-6P 5kΩ)	5kΩ,1/2W		
R28	MF,(RN14K2E1962D)	19.6kΩ,±0.5%,1/4W		

( ): Manufacturer's part number

* : Selected at factory

COMPONENT LIST OF Z7 POWER SUPPLY

CKT REF	DESCRIPTION	RATING		NOTE
C 1	Elect,(CE02W1J102)	1000μF,±20%,63V		
C 2	Cer,(CK924C1H102M)	1000pF,±20%,50V		
C 3	Cer,(CK924C1H473M)	0.047μF,±20%,50V		
C 4	Elect,(CE04W1V471)	470μF,±20%,35V		
C 5	Elect,(CE04W1A470)	47μF,±20%,10V		
C 6	Elect,(CE04W1A470)	47μF,±20%,10V		
C 7	Cer,(CK924F1H104Z)	0.1μF,+80/-20%,50V		
C 8	Cer,(CK924F1H104Z)	0.1μF,+80/-20%,50V		
F 1	Fuse,(MF51NN250V3.15A DC01)	3.15A,250V		
J 1	Connector, (DF1-10P-2.5DSA)			
J 2	Connector, (DF1-2P-2.5DSA)			
L 1	Microinductor, (LF8-101K)			
Q 1	Rectifier,(RB-152-LFB)			
Q 2	Tr,(2SD103)			
Q 3	Di,breakdown,(RD9.1EB)	8.5 to 9.6V,400mW		
Q 4	IC,(μPC151A)			
Q 5	Di,breakdown,(RD6.2EB)	5.8 to 6.6V,400mW		
Q 6	Di,(1S953)			
Q 7	Di,(1S953)			
Q 8	IC,(μPC14305H)			
R 1	CF,(ARD25T562J)	5.6kΩ,±5%,1/4W		
R 2	CF,(ARD25T222J)	2.2kΩ,±5%,1/4W		
R 3	CF,(ARD25T183J)	18kΩ,±5%,1/4W		
R 4	CF,(ARD25T562J)	5.6kΩ,±5%,1/4W		
R 5	Var,MF,(RJ-6P 2kΩ)	2kΩ,1/2W		

( ): Manufacturer's part number

* : Selected at factory

W4W4204 1/1

COMPONENT LIST OF Z8 AO DRIVER

CKT REF	DESCRIPTION	RATING		NOTE
C 1	Cer,(DD07SH270J)	27pF,±5%,500V		
C 2	Cer,(DD07SH270J)	27pF,±5%,500V		
C 3	Cer,(DD07SH270J)	27pF,±5%,500V		
C 4	Var,Cer,(CV01-D500)	50pF,350V		
C 5	Var,Cer,(CV01-D500)	50pF,350V		
L 1	Coil	50nH		
R 1	MF,(RS1FB 22ΩJ)	22Ω,±5%,1W		
Z 1	X'TAL OSC P.C. BOARD			
Z 2	AMP P.C. BOARD			

( ): Manufacturer's part number

* : Selected at factory

COMPONENT LIST OF Z1 in Z8 X'TAL OSCILLATOR P.C. BOARD

CKT REF	DESCRIPTION	RATING		NOTE
C 1	Cer,(CK924C1H103M)	0.01μF,±20%,50V		
C 2	Elect,(CE04W1J100)	10μF,±20%,63V		
C 3	Cer,(CK924C1H103M)	0.01μF,±20%,50V		
C 4	Not assigned			
C 5	Elect,(CE04W1J1R0)	1μF,±20%,63V		
C 6	Elect,(CE04W1V100)	10μF,±20%,35V		
Q 1	IC,(SN74128N)			
Q 2	Mixer,(SRA-1)			
Q 3	Di,breakdown,(RD9.1EB)	8.5 to 9.6V,400mW		
R 1	CF,(ARD25T471J)	470Ω,±5%,1/4W		
R 2	Var,MF,(RJ-6P 500Ω)	500Ω,1/2W		
R 3	CF,(ARD25T151J)	150Ω,±5%,1/4W		
R 4	CF,(ARD25T122J)	1.2kΩ,±5%,1/4W		
R 5	Var,MF,(RJ-6P 1kΩ)	1kΩ,1/2W		
Z 1	X'TAL OSC,(NS061C)	95 to 120MHz		*
Z 2	REGULATOR,(μPC14305H)			

( ): Manufacturer's part number

* : Selected at factory

W4W3151 1/1

COMPONENT LIST OF Z2 in Z8 AMP P.C. BOARD

CKT REF	DESCRIPTION	RATING		NOTE
C 1	Elect,(CE04W1J100)	10μF,±20%,63V		
C 2	Cer,(CK924C1H103M)	0.01μF,±20%,50V		
C 3	Cer,(CK924C1H103M)	0.01μF,±20%,50V		
C 4	Cer,(RPE111CH221G50)	220pF,±2%,50V		
C 5	Elect,(CE04W1E101)	100μF,±20%,25V		
C 6	Cer,(CK924C1H103M)	0.01μF,±20%,50V		
C 7	Cer,(RPE111CH221G50)	220pF,±2%,50V		
C 8	Elect,(CE04W1J1R0)	1μF,±20%,63V		
C 9	Cer,(DD07SH270J500V)	27pF,±5%,500V		
C10	Var,Cer,(CV01-D500)	50pF,350V		
C11	Var,Cer,(CV01-D500)	50pF,350V		
L 1	Coil,(SP0408-4R7K)	4.7μH		
L 2	Coil,(SP0408-R68K)	0.68μH		
L 3	Coil,(W4P3149)	50nH		
L 4	Coil,(W42T3821)	0.5μH		
Q 1	IC,(CA2810)			
Q 2	Tr,(2SC1971)			
R 1	Var,MF,(RJ-6P 100Ω)	100Ω,1/2W		
Z 1	REGULATOR,(μPC14312H)			

( ): Manufacturer's part number

* : Selected at factory

W4W3155 1/1

www.manualsplus.com
1030548

ANRITSU ELECTRIC CO., LTD.

5-10-27, Minami-azabu, Minato-ku, Tokyo, 106 Japan
Telephone: Tokyo (03) 446-1111 Telex: 0-242-2353 ANRITSU TOK
Cable Address: ANRITDENKI TOKYO